# "Safety First" Regulations of the State Dept. of Labor and Industry

SAFETY FIRST

(THE FOLLOWING RULES AND REGULATIONS HAVE BEEN ADOPTED BY THE PENNSYLVANIA INDUSTRIAL BOARD, SUBJECT TO THE PROVISIONS OF THE LAW (ACT 267, SECTION 15, P. L. 1913), WHICH PROVIDES THAT PERSONS AFFECTED MAY PETITION THE BOARD FOR CHANGES IN THE REGULATIONS. UPON THE RECEIPT OF SUCH PETITIONS, IT WILL BE REVIEWED BY THE BOARD AND IF CONSIDERED NECESSARY A PUBLIC HEARING WILL BE CALLED IN REGARD THERETO.)

Standards of safety, comprising the very best ideas on the subject on the part of men thoroughly conversant with a score of more branches of industry, will be promulgated by the State Industrial Board of the Pennsylvania State Department of Labor and Industry in the next few weeks. These standards have been worked out by committees representing employers and employes, safety experts, casualty experts and men who make and operate the appliances.

The law under which these standards have been framed permits any person affected to petition the board for changes in the regulations and on receipt of such petition the board will review the rules and make such changes as appear to be necessary after a public hearing is given.

The first regulations cover transmission of power, one of the most important matters in industry, if not in every day life, and the provisions as are follows:

The word "should" where used is to be understood as advisory and "shall" as mandatory. Unless otherwise provided for by regulations approved by the industrial board, the following safety regulations for transmission of power shall apply also to all power driven machinery having exposed collars, set screws, shafts, couplings, clutches, keys, pulleys, gearings and belts.

Emergency Stops: A station or stations must be provided in each room, section or department to stop immediately all power transmission therein. Such station or stations shall be properly marked and easily accessible. The prompt stoppage of machinery in an emergency is hastened by allowing the full load to remain on the machines.

Set Collars: Set collars shall be cylindrical, and the screws used to fasten the same to the shaft shall not project beyond the largest periphery of the collar. Split collars, after assembly, shall conform to the above specifications for solid collars.

Set Screws: All projecting set screws in moving parts of machinery shall be removed and replaced by flush set screws.

Shafts: Horizontal shafts less than six feet from the floor or working platform level including dead ends of same, shall be guarded, or protected by standard railing, as provided for horizontal belts. Shafts less than twenty feet in height over driveways above floor or ground level shall be guarded. Vertical shafts shall be encased or guarded to a height of six feet from floor or working platform, or be guarded by a standard railing with not less than fifteen inches clearance.

Shaft Couplings: Revolving shaft couplings shall be cylindrical and bolts used shall not project beyond the largest periphery of coupling or its projecting flanges.

Clamp Couplings: Heads and nuts of all bolts in clamp couplings shall not project beyond the largest periphery. It is recommended that the use of this style of coupling be discouraged unless guarded by a cylindrical sleeve, the full length of the coupling. New installations of such couplings must be guarded by a cylindrical sleeve the full length of coupling.

Jaw Clutch Couplings: Jaw clutch couplings shall be provided with a cylindrical sleev to cover the jaws.

Universal and Flexible Couplings: Universal and flexible couplings shall be guarded in a manner to remove all hazard.

Friction Clutch Couplings: Friction clutch couplings shall have their operating mechanism completely guarded where exposed.

Keys: All projecting keys in revolving shafts, where exposed to contact, shall be made flush or shall be guarded.

Pulleys: When the bearings are not self-oiling and the clearance between the pulley and bearing on line shafting is thirty-six inches or less, pulley shall be completely guarded on side nearest bearing and all keyways in shaft between such pulleys and bearing shall be substantially encased or properly filled. All parts of pulleys within seven feet of floor or working platform level shall be guarded underneath, or protected by a railing as provided for horizontal belts. Where the space between two pulleys or between a pulley and a bearing is less than the width of the widest belt used, such space shall be guarded so that the belt cannot get between the pulleys or between the pulley and bearing. A flange on side of pulley nearest bearing, or adjacent pulley, will be considered a guard. On counter shafts, the space between pulleys and the nearest bearing shall not be less than the width of the belt used unless such space is properly guarded. A flange on side of pulley nearest bearing, or adjacent pulley, will be considered a guard.

Gears: All toothed, chain driven and sprocket gearing used in the transmission of power or on machinery shall be completely enclosed wherever practicable, otherwise, at least to base of teeth. It is strongly recommended that pulleys, gears, sprockets, sheaves, etc., having spoke arms should be guarded by discs, as nearly as possible flush with rims of wheels. All friction drives shall be completely guarded.

Belts: Vertical and inclined belts extending to within six feet of floor or working platform level shall be substantially guarded as follows: If guard is placed less than six inches from belt, with en enclosure on all sides, not over one-half inch between members to a height of six feet above floor or working platform. If guard is placed between six inches and fifteen inches in clearance from belt, with an enclosure on all sides, not over two inches between members to a height of six feet above floor or working platform. A standard railing may be used if placed to allow fifteen inches clearance from the belt. Where belts pass through floor, a standard toe board shall protect floor opening. If upper part of horizontal belt is less than six feet from floor level or working platform it shall be guarded on top and sides or provided with a standard railing at least fifteen inches horizontally from the edge of the belt. Overhead belts with lower part seven feet or less from floor or working platform level, shall be guarded on sides and bottom. Passageways between upper and lower parts of belts are prohibited unless special permit is granted by the Department of Labor and Industry. Space traversed by such belt shall be completely barred against passage. Overhead belts ten inches or more in width and more than seven feet from floor or working platform shall be guarded underneath in such a manner as to insure the safety of persons below.

Belt Fasteners: Hereafter no change belts shall be laced with metal.

Shifters For Belts and Clutches: Shifters shall be provided for all tight and loose pulleys and clutches. Shifter and disengaging levers, when suspended overhead shall be arranged to hang vertically when belt is on loose pulley, or slutch is disengaged. Belt shifters shall be automatically held so that the belt will not creep from loose to tight pulley. All controls for stopping machines shall be within convenient reach of the operator from any operating position. Mechanical shifters for change belts are strongly recommended.

Lublication: Loose pulleys shall have oiling devices so arranged as to permit oiling, in any position of loose pulley when machinery is shut down. An efficient system of self-oiling is recommended for all bearings. Shafting shall not be oiled by hand while in motion. Drip cups and pans shall be securely fastened. Oiling shall be done only by authorized and experienced persons, properly clothed and in accordance with approved and safe practice.

Starting Signals: Ample notice should be given before transmission machinery is started by means of an efficient alarm or signal.

Inspection: All power transmission equipment should be given careful and thorough inspection at frequent and regular intervals, and records kept of such inspection.

Caution: It is unlawful to remove guards from machinery, except when shut down, and in that case the guards must be replaced before starting.

## Standard Railings

V-6.12.—The word (should) where used is to be understood as advisory and (shall) as mandatory.

(a) Standard railings shall be not less than three and one-half feet high, and be provided with an additional rail midway between the top rail and the floor, and shall be constructed in a permanent and substantial manner.

(b) If constructed of pipe, shall be not less than 1¼ inches inside diameter.

(c) If constructed of structural metal or bars, their section shall be at least equal to that of 1½x1½x3-16 angles.

(d) If constructed of wood, the posts shall be not less than 2x4 inches or its equivalent section, having rails not less than ⅞x6 inches or its equivalent section.

(e) Posts and uprights shall be spaced not more than 8 feet apart.

(f) The rails when of metal shapes, metal bars or wood should be placed on the side of the posts that will afford the greatest support and protection.

(g) One or more sides may be hinged, preferably with self-closing gates.

(h) Railings already installed, if of substantial construction and proper position and approved by the Department of Labor and Industry will be accepted, although not permitted in new installations.

(i) Where panels are filled with substantial expanded metal or wire mesh, the middle rails may be omitted.

V-1.6121—Toe Boards.—In addition t Standard Railings a Toe Board or toe piece, 6 inches high of wood or metal, shall be provided at

(a) Working platforms, balconies, and galleries if 6 feet or more above floor level.

(b) Floor openings and hoistways.

(c) Fly wheel and pulley pits.

(d) All other openings in floors and platforms where the safety of persons below is involved.

## Blowers and Exhausters

Note: All blowers and exhausters shall have all exposed collars, set screws, shafts, couplings, clutches, keys, pulleys, gears and belts guarded as provided for by the regulations for the transmission of power unless other regulations have been approved by the Industrial Board for special cases.

(a) Suction Tests.—Sufficient suction head shall be maintained in each branch pipe within 15 inches of the hoods to displace a minimum of two inches of water column in a U-shaped tube. Pressure to be taken by pressing tube attachment over small opening through pipe, commonly called Static method. Tests to be made with all branches open and unobstructed.

(b) Piping.—Round pipe shall be used for all main ducts and branch connections unless some other form is specifically approved by the Commissioner of Labor and Industry. All branch pipes must enter the main trunk pipe at an angle of 45 degrees or less. All bends, turns, or elbows in such pipes must be made with easy, smooth surfaces having a radius in the throat of not less than two diameters of the pipe on which they are connected. No branch pipe shall extend into the main duct and all laps shall be made in the direction of air flow.

(c) Emery wheel and buffing wheel exhaust systems shall be kept separate owing to danger of sparks from the former setting fire to the lint dust from the latter, if both are drawn into the same suction main.

(d) The inlet of the exhauster shall be at least 20 per cent. greater in area than the combined areas of the several connections to the hoods, and this increase in the main pipe shall be carried proportionately throughout the entire trunk line. The piping on the outlet of the fan is also to be at least 20 per cent. greater than the combined areas of the several connections to the hoods.

(e) The area of the main duct at any point should be equal as near as possible to the combined areas of all branch pipes to that point, plus the necessary 20 per cent. excess area. In general not more than two branches should be connected to a section of uniform diameter in the main duct.

(f) The use of screens across the mouth of branch pipes is prohibited.

(g) The withdrawal of air from a room by an exhaust system creates a vacuum and for this reason sufficient inlets for air shall be left open.

(h) The main trunk lines shall be provided with suitable clearouts not over 10 feet apart and the end of the main trunk line shall be blanked off with a removal cap placed on the end.

(i) The sizes of the branch pipes leading to the hoods for polishing and grinding wheels shall be as follows:

DIAMETERS OF WHEELS

| | Diameter of Branch Pipe |
|---|---|
| From 6 inches up to and including 16 inches ... | 4 inches |
| More than 16 inches up to and including 24 inches | 5 inches |
| More than 24 inches up to and including 30 inches | 6 inches |

For rag wheels the following dimensions shall be used:

DIAMETERS OF WHEELS

| | Diameter of Branch Pipe |
|---|---|
| Up to and including 6 inches ..... | 3 inches |
| More than 6 inches up to and including 12 inches | 4 inches |
| More than 12 inches up to and including 16 inches | 4½ inches |
| More than 16 inches up to and including 24 inches | 5 inches |
| More than 24 inches up to and including 30 inches | 6 inches |

(j) Plans for all blower installations should be submitted to this department in duplicate for approval before work is commenced and it should be clearly specified that the system is to be installed in strict accordance with the above rules and regulations.

(k) These plans should show the diameter of all wheels, dimensions of all piping, and should also show the general construction of hoods to be used. These rules and regulations as set forth above should be complied with before the system will be acceptable to the Department of Labor and Industry.

Note: The above rules and regulations shall not apply to grinding machines upon which water is used at the point of the grinding contact, nor shall they apply to any factory or workshop where men are not employed continuously at such wheels or belts more than three hours in twenty-four.

## Machine Tools

V-1.70.—The word (should) where used is to be understood as advisory and (shall) as mandatory.

Note.—Unless otherwise provided for by regulations approved by the Industrial Board, all Lathes, Planers, Milling Machines, Boring Mills, Metal Saws, Keyseating Machines, Shapers, Slotters, Gear Cutter, Drill Presses, and all other machine tools shall have all gears, sprockets, chains, bands, belts, pulleys, clutches, wheels, shafting, spindles, couplings, clutches, counterweights, revolving and reciprocating parts and all as specified in Volume 1, No. 2, Rules and Regulations for the Transmission of Power.

V-1.711.—The use of Safety Dogs is strongly recommended. Set screws and bolt heads shall be made flush or shall be guarded.

V-1.712.—All new installations of Face Plates, Chucks and Collets shall be cylindrical with no projecting parts on rim or periphery. Face Plates, Chucks and Collets now in use having projecting parts on rim or periphery shall be encased, guarded with hinged or other offective guard.

V-1.713.—The ues of drills on dead centers unless securely fastened there, should not be permitted.

V-1.74.—Cans and other automatic parts shall be carefully guarded.

V-1.75.—On hollow spindle lathes bar stocks should be guarded full length.

V-1.716.—Chip guards should be provided on Lathes and other machines for the protection of nearby persons as well as the operator, where there is an eye hazard by reason of flying chips or cuttings. Goggles will be considered adequate protection for operator.

Eye protection in all Lathe, Machine and Grinding work shall be carefully considered.

V-1.77.—All openings in bed frames shall be covered with shoot metal, expanded metal or wire mesh aprons, securely fastened in place. Openings in housings shall be filled or guarded.

Not less than 24 inches clearance shall be provided at both ends and sides of planers for planer bed, the work being machined and its chucking.

If clearance is less than 24 inches, clearance space shall be guarded with Standard Railings.

Floor openings and pits shall be guarded with Standard Railings and Toe Boards.

Attention is called to hazard attending the practice of reversing planing table by hand, except when absolutely necessary in setting up work.

Counterweights shall be placed in wells or securely guarded for their entire travel.

## Air Compressors

V-1.611.—The word (should) where used is to be understood as advisory and (shall) as mandatory.

Note.—All Air Compression Mahinery shall have all exposed collars, set screws, shafts, couplings, clutches, keys, pulleys, gears, fly wheels, and belts guarded as specified in Volume 1, No. 1, for the Transmission of Power and Air Compressors shall have fly wheels, tail rods, cranks and other dangerous moving parts guarded as specified in Volume 1, No. 2, for the use of Standard Railings and Toe Boards by the Industrial Board.

V-1.6112—Pneumatic Hammers.—New installations of pneumatic hammers shall be fitted with a device to prevent the piston from leaving the cylinder.

V-1.6113 — Portable Pneumatic Drills.—In new installations every portable pneumatic drill and pneumatic wood boring machine shall be provided with an automatic device to stop the machine and prevent accidental starting when the operator's hand is removed from the controlling valve.

V-1.6116—Pipe Connections For Compressed Air. — A straightway valve shall be fitted in new installations where a valve is required in a pipe line between a compressor and its air tank.

Where a stop valve is placed in discharge line between a compressor and an air tank a spring pop safety valve shall be placed between the compressor and such stop valve.

V-1.6114—Air Tanks.—The design and construction of air tanks shall conform to specifications approved by this Department. A drain cock shall be fitted at the lowest part of each air tank and the accumulated oil and water shall be frequently withdrawn.

## Woodworking Machinery

III-8.0—The word (should) where used is to be understood as advisory and (shall) as mandatory.

Note.—All moving parts of woodworking machinery such as saws, feed rolls, cutting heads, shall be guarded in a safe manner, and have all exposed collars, set screws, shafts, couplings, clutches, keys, pulleys, gears and belts guarded as provided for by regulations in Vo' me 1, No. 1, covering the Transmission of Power, unless other regulations have been approved by the Industrial Board for special cases.

Where special operations require the removal of the various sawguards mentioned below, an equally safe special guard must be substituted and the saw must always be guarded by one or the other while in motion.

III-8.11—Circular Rip Saws.—Circular rip saws shall be guarded by a Hood, and provided with a spreader located at the rear of saw. Saws shall be guarded under table to prevent possible contact. An exhaust hood will be considered a guard.

III-8.12—Circular Cross-cut Saws.—Circular cross-cut saws having fixed horizontal bearings shall be guarded by a hood. Swinging cross-cut saws shall have the saw guarded in an approved manner. All circular cross-cut saws shall be guarded under or at rear of table. Knuckle guards shall be attached to swing frame. Swing cut-off shall be equipped with an efficient device to return and retain saw at back of table.

III-8.13—Circular Saw Mills.—In setting saw mills, a horizontal clearance of at least 3 feet shall be allowed between any fixed object and any part of the traveling mechanism.

III-8.2—Band Saws.—Band saws shall have both wheels encased and be provided with a shield extending down to guide rolls to prevent operator from coming in contact with the saw. A band saw blade shall be completely guarded on its up travel.

III-8.3 — Wood Shapers. — Wood shapers have cutting heads carefully guarded. It is recommended that shapers be provided with a cylindrical collar having rounded corners, of a diameter not less than the greatest diameter of cutter and placed immediately above cutter, when the work operated on permits. The collar specified may have several ⅜-inch diameter perforations to permit view of work.

III-8.4 — Wood Jointers. — Wood jointers shall be provided with a cylindrical cutter head, and an automatically adjusted guard.

III-8.5—Mortising Machines.—Mortising machines shall be provided with thumb stops to prevent the hands of operator from coming in contact with chisel.

III-8.6 — Planing, Matching and Molding Machines.—See note under III-8.0.

III-8.7 — Sanding Machines.—Disc sanders shall have periphery and back of revolving head thoroughly guarded and approved exhaust system provided for the removal of dust.

III-8.8—Tenoning Machines.—Cutting heads, saws if used and all exposed moving parts, shall be carefully guarded.

## Stationary Steam Engines

111-12.5.—The word (should) where used is to be understood as advisory and (shall) as mandatory.

By stationary steam engine is meant an engine normally in one place and used regularly for furnishing motive power, farm and sawmill portable engines, portable hoisting engines, pumps used by contractors are not classed as stationary engines.

Note: These standards are to be considered as also applicable to gas engines, pump engines and air compressors, if their construction is such as to bring them within the scope of these requirements.

Ample notice should be given before machinery is started by the use of an efficient alarm or signal.

All steam, gas and hot air pumping engines and air compressors shall have all exposed collars, set screws, shafts, couplings, clutches, keys, pulleys, gears, fly wheels, and belts guarded as specified in Volume 1, No. 1, for the Transmission of Power by the Industrial Board, unless other regulations have been approved for special cases.

III-12.51—Automatic Stops.—It is recommended that an approved type of automatic engine stop, with speed limit device, be put on all stationary engines of more than 500 horsepower.

No live steam connections should be made to the receiver of a compound engine without a reducing valve, set so that the pressure will be well within the safe working pressure of the receiver and of the low pressure cylinder.

Such receiver shall be equipped with one or more safety relief valves of ample capacity, adjusted to a pressure well within the safe working pressure of the receiver and of the low pressure cylinder. These valves shall be provided with facilities for testing, such as a hand lever.

Jet condensers shall be provided with vacuum breakers to prevent water from entering the engine cylinders. Steam traps used to discharge water from steam separators shall be so installed that their operation will be evident.

Each engine shall be equipped with an efficient governor which will at all times automatically control the speed of the engine under varied loads, except where the load itself acts as an efficient governor. All belts or rope-driven governors shall be equipped with a device for stopping the engine in case the belt or rope should break.

Valve gear shall be so arranged, or other provisions shall be made, that in the event of the load being removed, the engine will stop if the governor would fail to act. (A broken belt stop will be considered sufficient for slide or four-valve engines).

Positive means shall be provided for blocking vertical and large horizontal engines, compressors and pumps during adjustments and repairs.

A safe method should be provided for turning over engines by hand.

Stationary stairs or iron ladders shall be provided for access to such emergency valves as cannot be operated from the floor or other accessible place.

Platforms and walks on engines shall have standard railings and toe guards. This applies also to the engine bed alongside of the connecting rod or crosshead, when it is used as a footwalk.

Provisions should be made where practicable for oiling all engine bearings, journals, accentrics, crank pins, etc., from outside the guard railings. All power transmission equipment should be given careful and thorough inspection at frequent and regular intervals, and complete records kept of such inspections.

JOHN PRICE JACKSON,
Chairman.
GEORGE S. COMSTOCK,
JAMES C. CRONIN,
JOHN P. WOOD.
MRS. SAMUEL SEMPLE,
Industrial Board.

## Forging and Stamping Machinery

Note: Unless otherwise provided for by regulations approved by the Industrial Board, all Forging, Pressing, Forming and Stamping Machines shall have all exposed collars, set screws, shafts, couplings, clutches, keys, pulleys, gears and belts guarded as provided for in Volume 1, No. 1, Rules and Regulations for the Transmission of Power.

(a) A locking device shall be provided for presses and shears to prevent the machine coming into action prematurely or while the tools are being set. Where tight and loose pulleys are used, the locking device may be applied to the same instead of to the machine. Where direct motor-drive is used the switch shall be secured in an open position.

(b) On all cold work a positive guard, which is controlled by the moving ram, is recommended for blanking, drawing and forming presses operating on cold material. The guard should be arranged to throw the operator's hands away from the danger zone.

(c) Sheet material presses for stamping, blanking, forming, trimming, shearing and punching should, where the nature of the work permits, have an inclined bed or have an automatic or roll feed.

(d) If neither false fingers, sliding dies, double trips, soft metal plyers, nor work holders using compressed air or suction for handling of the material operated on, are used, then guards of metal strips, metal netting or plate glass to protect the operator are recommended; the same being either fixed or automatic.

(e) A positive disengaging device for clutches is recommended.

(a) All Hammers operated by steam, air gravity or stationary, shall be provided with positive locking devices so that when the ram is at the top or the bottom of its stroke it can-

(b) Every steam and air hammer shall be provided with a stop valve in the admission pipe line, which must be closed, preparatory to, and during the repair of the hammer or while changing dies.

(c) Extreme care shall be taken in making and using hammer die keys on all power hammers to see that they are not only of suitable material, but that they are driven into place with due regard to the safety of the operator and of the neighboring workmen.

(d) It is suggested that hammer die keys be made of open hearth material (Mn .40 to 50 per cent.; C .50 to .60 per cent.); that they be machined accurately to fit notches; and, that the ends be tempered to prevent spreading, upsetting or breaking. The ends of keys shall be redressed when necessary.

## Polishing and Grinding Machines

V-1.80.—The word "should" where used is to be understood as advisory and "shall" as mandatory.

Note: All Polishing and Grinding Machines shall have all exposed collars, set screws, shafts, couplings, clutches, keys, pulleys, gears, fly wheels, and belts guarded as specified in Volume 1, No. 1, for the Transmission of Power by the Industrial Board.

Grinding wheels are to be understood as wheels composed of a practically uniform mixture of an abrasive material and a bonding cement, formed or molded into a single piece. This does not include grinding wheels of natural stone.

Polishing wheels are to be understood as wheels composed of material other than abrasive, to all or a portion of whose surface an abrasive material is applied.

Disc grinders having discs of steel, iron or equally strong material are classed as polishing wheels with respect to safety of operation.

(a) Grinding Wheels.—The use of defective grinding wheels is prohibited.

(b) Grinding wheels shall fit freely on their spindles. They should never be forced on, nor should they be too loose. A clearance of .005 inch is recommended.

(c) The soft metal bushings shall not extend beyond the sides of the wheels at their centers. Wheels shall be kept as true as practicable and work rests shall be kept adjusted close to wheels.

(d) Wherever possible a compressible medium, such as blotting paper, rubber, lead, etc., at least as large as the diameter of the flanges, shall be fitted between a wheel and each of its flanges.

(e) Flanges for Grinding Wheels.—Each flange whether straight or tapered must be relieved or recessed at the center at least 1-16 inch on the side next to the wheel for a distance as provided in Table B.

(f) The maximum and minimum dimensions of flanges and the minimum diameter of flat spot at center of wheel, as given in Tables A and B, must be observed.

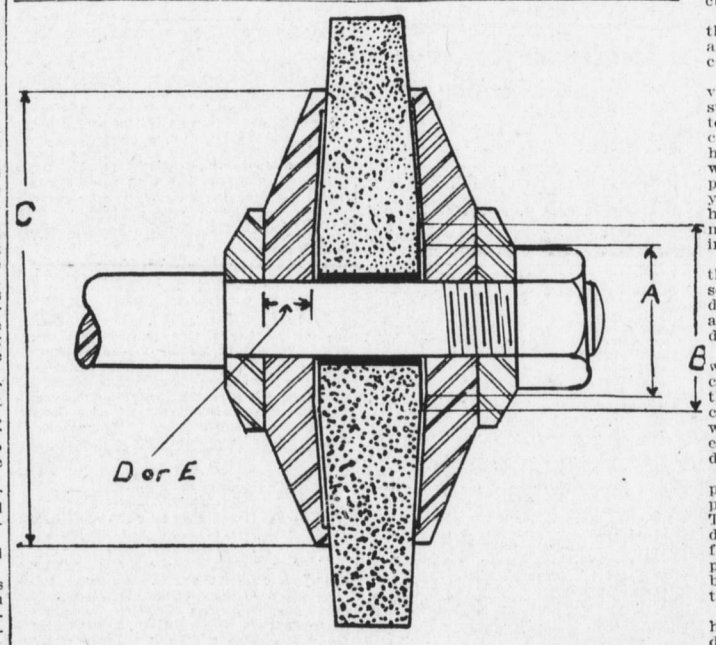


Tapered Flanges for Emery Wheels

Tapered Flanges for Emery Wheels:

A Maximum flat spot at center of flange.

B Minimum flat spot at center of wheel.

C Minimum diameter of flanges.

D Minimum thickness of flange at bore for wheels 1 inch or less in thickness.

E Same as D, but for wheels over 1 inch in thickness.

TABLE A

TAPERED FLANGES AND TAPERED WHEELS

| Diameter of wheel. | A Maximum. | B Minimum. | C Minimum. | D Minimum. | E Minimum |
|---|---|---|---|---|---|
| 6 | 0 | 1 | 3 | ⅜ | |
| 8 | 0 | 1 | 5 | ⅜ | |
| 10 | 0 | 2 | 6 | ⅝ | ½ |
| 12 | 4 | 4½ | 6 | | ⅝ |
| 14 | 4 | 4½ | 8 | | ⅝ |
| 16 | 4 | 5 | 10 | | ⅝ |
| 18 | 4 | 5 | 12 | | ¾ |
| 20 | 4 | 5 | 14 | | ¾ |
| 22 | 4 | 5 | 16 | | ¾ |
| 24 | 4 | 5 | 18 | | ¾ |
| 26 | 4 | 5 | 20 | | ¾ |
| 28 | 4 | 5 | 22 | | ⅞ |
| 30 | 4 | 5 | 24 | | ⅞ |

TABLE B

STRAIGHT FLANGES AND STRAIGHT WHEELS

| Diameter of wheel. | Minimum outside diameter of flanges ... | Diameter of recess ..... | Minimum thickness of flange at bore ..... |
|---|---|---|---|
| 6 | 2 | 1 | ⅝ |
| 8 | 3 | 2 | ⅝ |
| 10 | 3½ | 2¼ | ⅝ |
| 12 | 4 | 2¾ | ½ |
| 14 | 4½ | 3 | ½ |
| 16 | 5½ | 3¼ | ½ |
| 18 | 6 | 4 | ⅝ |
| 20 | 7 | 4½ | ⅝ |
| 22 | 7½ | 5 | ⅝ |
| 24 | 8 | 5½ | ⅝ |
| 26 | 8½ | 6 | ⅝ |
| 28 | 10 | 7 | ¾ |
| 30 | 10 | 7 | ¾ |

(g) Flanges shall be made of steel or other equally strong material.

(h) Both flanges in contact with a wheel shall be of the same diameter.

(i) New installations of tapered flanges shall have a taper of not less than ⅜ inch (preferably ¾ inch) to the foot on each flange and where a flat spot is used it shall conform to dimensions set forth in above table. But one taper should be used in any one establishment.

(j) If but one tapered flange is used, the taper shall be 1½ inches to the foot.

(k) Wherever possible only 2 inches of the wheel should project beyond the flanges where the wheel is over 10 inches in diameter.

(l) All grinding wheels shall conform to the dimensions for flanges as set forth in above table.

(m) The surface of wheels in contact with straight or tapered flanges, the surface of flanges in contact with wheels and the compressible material between flanges and wheels shall be clean, smooth and free from foreign material.

(n) Protection for Grinding Wheels.—Either substantial hoods, tapered flanges, or both, sufficiently strong to retain the pieces of a wheel in case of breakage and so designed as to leave exposed the least portion of the wheel compatible with the work in hand shall be fitted to all grinding machines.

(o) Precision Grinding Machines.—Precision and tool grinding machines shall be thoroughly guarded where possible. Proper cramping devices and hoods shall be applied to precision grinding machines where the diameter of the hole in the wheel will not permit the application of the specifications for guards elsewhere set forth in these regulations.

(p) Cup and Cylinder Grinding Wheels. — Cup and cylinder wheels shall be surrounded, as much as operating conditions will allow, either by a substantial hood or be retained by a chuck which surrounds the periphery at least ¾ the height of the rim of the wheel.

(q) All specially shaped wheels shall be substantially guarded.

(r) Arbors, Fixed Collars and Machines.—The protruding end of the arbor and its nut shall be guarded.

(s) Arbor bearings shall be of ample size and shall be kept carefully adjusted and lubricated.

(t) Arbors of floor, bench and swing frame grinding machines for wheels 12 inches or more in diameter, shall have fixed collars not less than 1-3 the diameter of the wheel being used.

(u) Floor and bench grinding machines shall be rigidly constructed and securely fastened to a suitable foundation.

(v) Grinding wheel manufacturers shall furnish information regarding speeds at which wheels are recommended to operate safely.

(w) Wheels must not be operated at a speed in excess of that which is recommended by the manufacturer.

(x) Eye Protection.—Approved eye protection shall be provided for operators on grinding wheels if the operation involves the possibility of eye injury.

V-102—Blowers and Exhausters.—For Grinding and Polishing Machinery.

Note: All blowers and exhausters shall have all exposed collars, set screws, shafts, couplings, clutches, keys, pulleys, gears, fly whees, and belts guarded as specified in Volume 1, No. 1, for the Transmission of Power by the Industrial Board.

(aa) Suction Test.—Sufficient suction head shall be maintained in each branch pipe within 15 inches of the hoods to displace a minimum of 2 inches of water column in a U-shaped tube. Pressure to be taken by pressing tube attachment over small opening through pipe, commonly called Static method. Tests to be made with all branches open and unobstructed.

(bb) Piping.—Round pipe shall be used for all main ducts and branch connections unless some other form is specifically approved by the Commissioner of Labor and Industry. All branch pipes must enter the main trunk pipe at an angle of 45 degrees or less. All bends, turns, or elbows in such pipes must be made with easy, smooth surfaces having a radius in the throat of not less than two diameters of the pipe on which they are connected. No branch pipe shall extend into the main duct and all laps shall be made in the direction of air flow.

(cc) Emery wheel and buffing wheel exhaust systems shall be kept separate owing to danger of sparks from the former settinfi fire to the lint dust from the latter, if both are drawn into the same suction main.

(dd) The inlet of the exhauster shall be at least 20 per cent. greater in area than the combined areas of the several connections to the hoods, and this increase in the main pipe shall be carried proportionately throughout the entire trunk line. The piping on the outlet of the fan is also to be at least 20 per cent. greater than the combined areas of the several connections to the hoods.

(ee) The area of the main duct at any point should be equal as near as possible to the combined areas of all branch pipes to that point, plus the necessary 20 per cent. excess area. In general not more than two branches should be connected to a section of uniform diameter in the main duct.

(ff) The use of screens across the mouth of branch pipes is prohibited.

(gg) The withdrawal of air from a room by a exhaust system tends to create a vacuum and for this reason sufficient inlets for air shall be left open.

(hh) The main trunk lines shall be provided with suitable clean-outs not over ten feet apart, and the end of the main trunk line shall be blanked off with a removal cap placed on the end.

((ii) The sizes of the branch pipes leading to the hoods for polishing and grinding wheels shall be as follows:

| Diameter of Wheels. | Diameter of Branch Pipe |
|---|---|
| From 6 inches up to and including 16 inches ... | 4 inches |
| More than 16 inches up to and including 24 inches ..... | 5 inches |
| More than 24 inches up to and including 30 inches ..... | 6 inches |

For rag wheels the following dimensions shall be used:

| Diameter of Wheels | Diameter of Branch Pipe. |
|---|---|
| Up to and including 6 inches ..... | 3 inches |
| More than 6 inches up to and including 12 inches ..... | 4 inches |
| More than 12 inches up to and including 16 inches ..... | 4½ inches |
| More than 16 inches up to and including 24 inches ..... | 5 inches |
| More than 24 inches up to and including 30 inches ..... | 6 inches |

(jj) Plans.—Plans for all blower installations should be submitted to this department in duplicate for approval before work is commenced, and it should be clearly specified that the system is to be installed in strict accordance with the above rules and regulations.

(kk) These plans should show the diameter of all wheels, dimensions of all piping, and should also show the general construction of hoods to be used. These rules and regulations, as set forth above should be complied with before the system will be acceptable to the Department of Labor and Industry.

Note: The above rules and regulations shall not apply to grinding machines upon which water is used at the point of the grinding contact, nor shall they apply to any factory or workshop where men are not employed continuously at such wheels or belts more than three hours in twenty-four.

JOHN PRICE JACKSON,
Chairman.
GEORGE S. COMSTOCK,
JAMES C. CRONIN,
JOHN P. WOOD,
MRS. SAMUEL SEMPLE,
Industrial Board.

Advertisement.

# PREVENTION NOW THE TIMELY TOPIC

## Commissioner Dixon Gives Some Pointers on How to Stay Well in Winter Time

State Commissioner of Health Samuel G. Dixon gives some points on how to stay well in the rigorous winter time in his weekly talk on hygiene. He discusses prevention as better than cure. In his remarks the doctor says:

The well worn adage to the effect that "An ounce of prevention's worth a pound of cure" has long been accepted as one of the wisest of saws.

We are all willing to admit that prevention is the thing, but too often we stick at the price and then are obliged to pay roundly when the necessity for cure is forced upon us. A day at home in bed when one is threatened with a hard cold seems to many people an extravagant waste of time and yet it would be difficult to estimate how many really serious illnesses might be prevented by rest and care in the early stages..

How many parents have suffered the agonies of regret for failing to seek medical advice when their children were suffering from "sore throat" and which eventually proved to be diphtheria with terrifying rapidity.

How frequently in severe winter weather we see women sacrificing comfort and defying common sense in their dress for the sake of what they consider appearances. How many men working under strain and physically exhausted try to "buck up" with a few drinks.

These are but a few common examples of the people who will not pay the price for their ounce of prevention. They may partly escape once, twice, a dozen times, but in the long run they foot a heavy bill. The physicians' best patients are the men and women who boast of never having a doctor until they are really sick.

Much of the greatest work which has been accomplished in medicine during the past generation has been preventive work. The great future of the art lies in prevention and the time is rapidly approaching when to suffer from many of the now common ailments, will be looked upon by all intelligent people as evidence that the sufferer has been inexcusably neglectful of his own welfare.

Do not hesitate to pay cheerfully the cost of prevention when health is at stake for no investment offers a higher premium than your physical well-being.

### TYPO SCALE IN FORCE

**Linotypes All Over City Now Working Under Agreement of 2 Years Ago**

Beginning to-day, the weekly wage scale for linotype operators prevails in all printing plants of the city. The piecework rate, which was used in the State printing contracts and at one of the newspaper plants of the city, is discontinued, according to the agreement signed two years ago by the local Typographical Union. It was not then put into effect because of State contracts.

The effect of the new scale on the amount of wages paid cannot be definitely determined immediately, but it is said that efficient typesetters will be paid in proportion to their former earnings and will not be at any loss through the weekly scale. The minimum weekly scale paid to linotype machine operators is $21.

### PARTY AT NESBIT HOME

*Special to The Telegraph*

Blain, Pa., Jan. 1.—A large sleighing party was held last evening at the home of Mr. and Mrs. Andrew Nesbit, at Pine Grove. A pleasant evening was spent playing games and refreshments were served.

### ACCUSED OF FLEECING FARMER

*Special to The Telegraph*

Lewistown, Pa., Jan. 1. — Walter Mackey, whose home is in Altoona, has been arrested and lodged in jail here. Mackey is accused by Farmer Tom McKee, of near here, of fleecing him out of $8 and of stealing a prize turkey weighing twenty-five pounds.

### IMPROVING LIGHT SYSTEM

*Special to The Telegraph*

Halifax, Pa., Jan. 1. — The light plant is being overhauled and reinstalled in the local United Brethren Church. The work is being done by E. F. Koppenheffer, assisted by the men of the congregation.

### RETURNED FROM HOSPITAL

*Special to The Telegraph*

Lucknow, Pa., Jan. 1.—Miss Myra Swartz, granddaughter of Mr. and Mrs. F. K. Swartz, Jr., residing along the river road, has returned from the Shope hospital, of Harrisburg, where she underwent an operation for appendicitis, severals days ago.