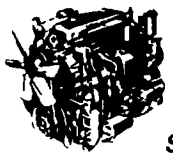

LEID DIESEL SERVICE

Service - Sales - Parts
Specializing in Detroit Diesel

237 Green Hill Road, Newville, PA 17241
Phone 717-776-7725 • Fax 717-776-4127

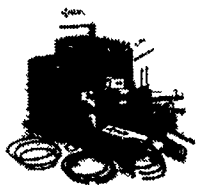

Parts for...

- Detroit Diesel
- John Deere Engines
- Rockford, Clutches
- Twindisk, Clutches

Also...

Rebuilt Exchange Engines • Used Engines • Used Parts • Gen. sets • Power units

We ship UPS Daily
Dealer Inquiry Welcome

SPRING TRUCKLOAD SALE

Herschel Disk Blades

20" Diameter, 7 Ga Thick – **$11.85 ea.**
Quantity Discounts Available (100 or more)

John Deere KBA Disk Parts & Service

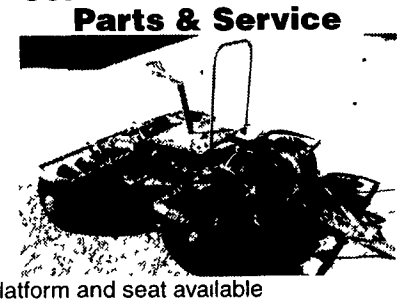

- Platform and seat available
- We rebuild from any condition
- Also manufacture new 20 & 24 blade disks w/sealed bearings
- 20 blade - 7' wide, 24 blade, 8' wide

Groffdale Machine Co.
194 S. Groffdale Rd., Leola, PA 17540
717-656-7657

JOHN DEERE

WALTEMYER'S SALES & SERVICE INC.

Route 24, 2 Miles South Of Red Lion
717-244-4168
800-225-6314

TRACTORS

NEW
JD 6410 2WD w/Cab
JD 5510 2WD
JD 7410 MFWD w/Cab

USED
JD 3020 NF
JD 2355
JD 2010 Dsl
Int 966 Dsl w/Loader & WFE
MF 165
JD 1968 3020 Dsl
Int 2424 3 pt hitch

HAY EQUIP.

NEW
JD 446 Round Baler
JD 456 Silage Special Round Baler
JD 710 MoCo

USED
JD 1217 MoCo
JD 1350 MoCo
Kuhn GMD 700 Disc Mower
1209 MoCo
NH 69 Baler w/Thrower

HARVESTING

NEW
JD 5¼ Hay Pickup
JD 2RN Corn Head

USED
Byron 105 String Bean Harvester
IH 303 Combine
10 G H 2 RW C H

TILLAGE

USED
10 Chisel Plow 3 pt hitch
JD 210 Disc, 13 9" wide

PLANTING

NEW
JD 1750 6R No Till Corn Planter

USED
JD 450 Drill 8 Wide
JD 4R 1240 Planter
AC 4R No-Till Planter
White 6R 5100 Seed Boss No Till Planter
JD LF 10 Fertilizer Spreader
JD 8300 DD 18x7
JD 8300 Drill w/harrow attach

MISC.

NEW
Model 200 Mahoning Outdoor Furnace
JD 709 Pull Type
Cherokee Post driver
616 Rotary cutter
413 Rotary cutter
717 Rotary cutter
Unverferth header wagon

USED
Creighton Trailer 14 long, 8 000 GVW
40 Hay & Grain Elevator
Bushhog 160 13 Rotary Cutter
JD 27 Flail Chopper
JD 25A Flail Mower
Potato Bulk Body on Trailer
JD F725 w/54" Deck
F932 w/60" Deck
Flatbed Farm Wagon w/Sides

Store Hours
Monday-Friday 8-5
Saturday 8-12

FOR RENT
JD 750 No-til Drill
10', w/grass seed box.
Located near Columbia
– Call –
717-252-3156

J D EQUIPMENT

Pennsburg, PA 18073 • **215-679-5958**

Check Out The NEW Thomas Mini Excavators In Stock

JD 310D, 4x4... .... .CALL
(2) JD 450G, 6-Way Dozers.....CALL
Thomas T173HL Skid Steer, 200 Hrs... **$16,500**
www.jdequip.com

Evergreen Tractor Co.

717-866-2585 • 1-800-441-4450
41 South Fairlane Ave., Myerstown, PA 17067
Parts, Rentals & Service for Bobcat.
Used Equipment & Skid Loader Rentals
FREE DELIVERY - Pictured Equipment - Within 100 Miles

USED PARTS FOR
WE SHIP UPS
- JD [illegible]
- IH [illegible]
- White [illegible]
- MF [illegible]
- Combine Parts IH [illegible] JD [illegible]
- Grain Drills
- JD [illegible]
- Grain Elevator
- Roller [illegible] Bobcat
- JD [illegible]
- Corn Husker
- Combine Corn Head
- JD [illegible] Planters
- IH [illegible] Planters
- JD 7000 7200 Planter
- JD 672 Rake
- NI 325 Picker & NI 311 Sheller
- Kewanee Discs
- JD 1400 Combine

Farmhand 2½ T Hyd. Drive w/Scales

IH 800 4x Liq. Very Good

JD 8300 23x7 w/Grass & Press (Late Model)

Miller 3 Bar Offset Disc

COMING IN
White 271 20 R Flex Disc
IH 5100 21x7 w Grass & Press
UNI [illegible]
(2) JD 1010 Field Cultivator

JD 1000 18 Ft. Folding Field Cultivator

BALER & THROWER

N H 1010 Stack Wagon	$1,900
(4) JD #30 340 & #2	$250-$1,400
Hesston 560 R-Baler	
Vermeer 605E R-Baler	
(4) NH #75 & 58A & 54	$300 to $750

BLOWER & RAKES & TEDDERS

Kuhn GS 5 Rake-Tedder	
Deutz Fahr K 200 Rotary Rake	
Gehl 806 Rake-Tedder	$1,400

PLANTERS/ DRILLS

JD 7000 6X No Till Liq	$4,300
JD 7000 4X N T Liq	$3,300
JD 7000 4X N T Dry	
IH 400 6X w/Fert (Excellent)	$1,650
IH 800 4X Liq V Good	
IH 800 4 Dry Real Good	
AC 3 3 4X No Till	$1 800
JD [illegible]	
(2) Holland 2 Row Setter & Fence	$375 to $575
JD 8350 13x7 w Grass & Fert	$1,500
(2) 56 4x Planter Dry Fert Very Good	
IH 510 13x7 w Fert & Grass	$1,750

ROW CROP CULTIVATORS
(3) JD 1 6 8 Row Frt Mtd Cultivators
(2) JD 2-Cyl Cultivators
(2) IH 85 1X FT Mtd Cult
(2) Brillion 4 Row R C Mountain Till cult
(1) Hiniker 1 X 6 RN No-Till Cult
(1) JD RM 4 5 6 RN Cult For Jaguar

USED SKID LOADER & ATTACH.
Set of Tri Ag Bias Tires Like New
New Large Treatment & Auger For Skid Loader
BC Grader Attachment
7 Dirt Blade- Hyd Angle
New 7 Snow & Dirt Blades
New Landscape Rakes - 60 & 72

CULTIVATORS

Kewanee 18 Flat Fold	$1 750
JD 1000 12 Ft & 18 Ft Field Cultivators	$2,150
Brady 16 Cultivator w Harrow	$800

GRAIN CARTS & STALK SHREDDERS

Brady 14 Stalk Chopper	$1,475
Lundell 16 ft Stalk Chopper (New)	$4,800
(2) Gravity Box w/Gear	$850-$1 250

DISCS PACKERS/MULCHERS

AMCO 25 R Flex Disc	$4,300
Brillion 13 Cultimulcher	$1,750
JD BWF 12 Cultimulcher	
JD 7 Offset Disc	
(3) 10 ft to 13 ft Miller Offset Disc	
Kewanee 12 Mulcher	$1 800
JD 11 ft packer 3 Axle	$975
Oliver 232 10 ft Disc	$1,500
IH 500 12 ft Heavyweight Disc	$1,850
JD TWA 13 H D Plowing Disc	$3,350

HARVESTERS - HEADS & P/U'S

JD 3960 w Electronic F Grain Condition	$4,500
(2) NH 5 & 7 Disc Cut Heads	$650-800
JD Corn Husker Adapter Plate & Stalk	
NH 770 Snapper Head	$375
(2) Hesston Pickup Heads	$575

HARVESTERS - HEADS & P/U'S, cont

(3) Gehl 1000 1200 P U	$400-$1,600
(2) Gehl 3000 Corn Head	$500-$1,300
(2) JD 5 P U Head	$350-$500

HAYBINES & MOWERS

JD 1207 Haybine	$2 850
Gehl IH [illegible]	CALL
JD [illegible]	$2,100
JD [illegible]	$675
JD 235A [illegible]	$850
Gehl [illegible]	$900-$1,650
Oliver [illegible]	$850
(2) JD A [illegible]	$1600-$2,300

COMBINES/HEADS/PICKERS

JD 1023 [illegible] Loaded	$5 800
JD [illegible]	$1 475
White 70 [illegible]	$2,100
JD [illegible]	
JD 216 Black New Top & Bottom	$2,350
Woods Header Cart	$700
JD 13 Rigid	$3,200
JD 15 & 13 Soybean Head	$1 375

PLOWS, CHISELS & V-RIPPERS

(2) Oliver 5 4 Bottom Plows	$900 & $1,650
White [illegible] SRS (Real Good)	$2,350
IH [illegible] 3 Pt Chisel V Good	
IH [illegible] SRS Var Width (Good)	
JD [illegible] SRS Very Good	
JD [illegible] SRS	
JD [illegible]	
(2) JD [illegible] SRS Good	
(3) IH JD Trailer Plows	$350-$650
Lon Hill 9 Disc Chisel	$3,250
Glencoe 11 Disc	$3,750
White [illegible] SRS	$2,350
(2) JD [illegible]	$875 & $1,300
JD [illegible] On Land Plows	$1,150
(2) [illegible]	$1,100-$1 400
(8) JD 2 3 4 Bottom Plows	$300-$500
(2) IH MF 880 5 & 6 18 SRS	$900-$1,800
White 908 Cultivator Top Plows 3 4	$825
Add On Bottoms For All Plows	

GRINDER MIXERS
FarmHand 8 [illegible] Scales Hyd Drive
Automatic [illegible] PTO Roller Mill $1 700

MISCELLANEOUS

JD 800 Dry Fert Spreader	$950
JD IH Flex Planting Unit	
Brady Scraper Loader	
Shultz [illegible]	$750
(2) Lely [illegible]	$2 250-$2,400
Freeman [illegible]	$825
(3) JD [illegible]	$650-$1 250
(2) [illegible]	
Rolling Barrel Attachment	
JD 4400 Straw Chopper [illegible]	$375
Wire Wood Wire [illegible]	$700 & $1 100
Bale Bags & [illegible]	
JD [illegible]	
Hay [illegible]	
JD [illegible]	
JD [illegible]	$2,000
8 Line [illegible]	

OPEN: Monday thru Friday 7:30-4:30, Saturday 8 to 12

TRACTORS

MF 1100 dsl w/cab & diff lock clean tractor
MF 1080 dsl tractor good tires
MF 175 dsl good running tract SOLD
Case 1835C skid ldr eng overhaul hydra redone gd shape
MF 245 gas good rubber & overhauled engine
MF 230 diesel eng overhaul new paint & rubber
(2) MF 180 diesel tractor, good running cond
MF 135 gas new paint, overhauled engine & new rubber
Ferguson 40 gas nice running new paint
MF 236 Quick-Tach Ldr To Fit MF 265 or 275

EQUIPMENT

Glenco 10 tooth chisel plow
AC 3 pt 8 tooth chisel plow
Brillion 10 cultimulcher
JD 10 cultimulcher
MF 880 4x16 spring reset plow
MF 880 5x16 hyd reset plow
MF 3pth hay rake
JD 8300 6x8 grain drill
Cultipackers 10', 12', 14 & dif sizes
NEW 7 & 8 scraper blades
5' & 6 finish mowers
NEW gates and hay feeders
Used Brillion cultipackers and Cultimulcher parts

MF Tractor parts Dismantling 20 30 35 40 50 65 85 90 135 150 165, 175, 178 180 205x4 265 270, 283 285 383 399 4WD 1080 1085, 1100, 1130 1105 1135, 1150 1155, 2745, 2775 2805 3090, 3680 MH 22 30 44 Balers 3, 12 & 124 [illegible]

NOLT'S EQUIPMENT
403 Centerville Rd Newville PA 17241
off 81 exit 11, 2 miles N on 233
(717) 776-6242 No Sunday Calls
No Out-Of-State Personal Checks We Ship UPS

Brand New R&J X-Fold Packers In Stock - Narrow Transport At Economy Price

Sizes In Stock: Non Fold 14 Foot
21 Foot X-Fold • 24 Foot X-Fold

See Binkley & Hurst For Rubber Tire Scapers

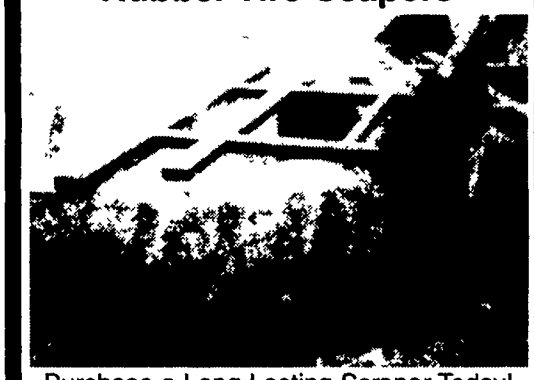

Purchase a Long Lasting Scraper Today!
3 Pt. and Universal Skid Steer Mount

ALUMINUM PORTABLE ELEVATORS

(Not recommended for permanent installations - unless ordered with 1/4" poly-wear liner for longer pan life.)

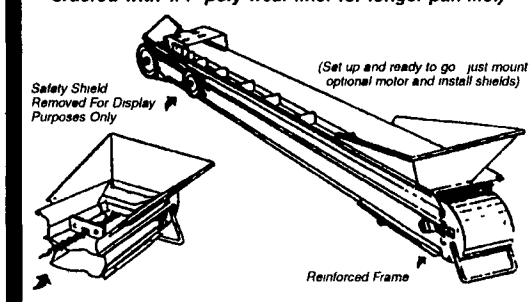

EXCLUSIVE Boot Guard with Agitator

- Heavy-service, belt-type guard attached to sturdy hinge on boot
- Guard rests on flights - movement of flights provides agitating action - keeps material or silage out of boot and moving up the elevator

Includes incline hopper, motor mount, and required belts. Set Up and Ready to Go - Just mount motor (not included) and install shields. Optional polywear liner protects pan - super-slick, self-lubricating liner prevents freezedown.. reduces chain stretching increases chain and pan life, cuts noise levels and lowers energy consumption by up to 30%

- Easy to handle - sturdily built
- Light weight - rust resistant - never needs painting
- Enclosed bottom trough for clean chain return and extra strength
- Take-up for chain at idler shaft - easily tightened without affecting drive adjustments
- Dropout hole with gate - helps prevent returning cobs and husks from jamming in boot end of elevator Allows returning cobs and husks to fall out before reaching boot Gate can be quickly closed when materials other than cob corn are being conveyed
- Plow-contour corded rubber flights designed for maximum efficiency, minimum ride-up

BINKLEY & HURST BROS. INC.
MasterCard DISCOVER Farm Plan
133 Rothsville Station Rd.
P.O. Box 0395, Lititz, PA 17543-0395
(717) 626-4705 1-800-414-4705 Fax (717) 626-0996
www.binkleyhurst.com