USED TRACTORS

- IH 986 Cab & Air, 2000 Hrs.... .....$11,900
- IH 1066 ..... $8,900
- IH 1066 Black Stripe, No 3 Pt. $8,200
- IH 1066 .. $7,800
- IH 1466, Cab, sharp $10,500
- IH 1066 .. .. $8,400
- IH 1066 Rebuilt Engine.. ....$11,900
- IH 986, Cab & Air, 475 Hrs, 1 of a Kind. $25,900
- IH 986, Cab & Air, 4,700 Hrs , Nice.$13,900
- IH 1086, 1980 Model, 4900 Hrs . $13,900

USED EQUIPMENT

- Gehl 1540 Silage Blower $1,450
- Gehl TR30-38 2R corn head $1,400
- FNH 565 Baler w/Thrower. $8,200
- FNH 565 Baler (like new) $7,800

Liquid Manure Pit Pumps

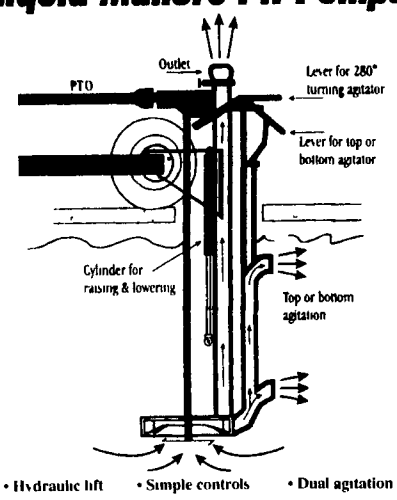

• Hydraulic lift • Simple controls • Dual agitation

AVCO VM

MILLER'S REPAIR
1 Mile North of Bird in Hand
8 Miles East of Lancaster
Ph. 717-656-6109

BCS
The Best Tiller On Earth

SPRING REBATE SALE

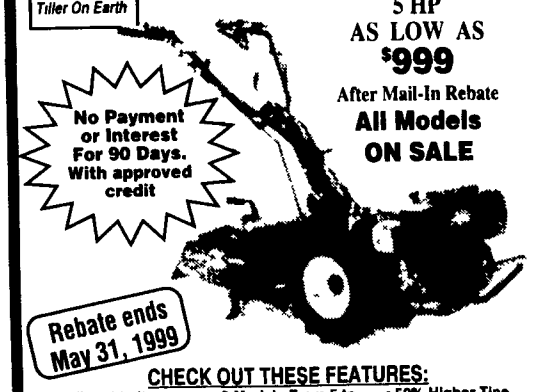

No Payment or Interest For 90 Days. With approved credit

5 HP AS LOW AS $999
After Mail-In Rebate
All Models ON SALE

Rebate ends May 31, 1999

CHECK OUT THESE FEATURES:

- No Time-Limit Warranty On All-Gear-Drive Transmission
- No Bolts or Chains
- 8 Models From 5 to 14 Horsepower
- Recoil or Electric Start
- Quick-Change Handle Positions
- 50% Higher Tine Speed Than The Competition
- Adjustable Tiller Width from 18"-30"
- Handles Rotate 180°

BUY A TILLER,& SAVE ON ATTACHMENTS!

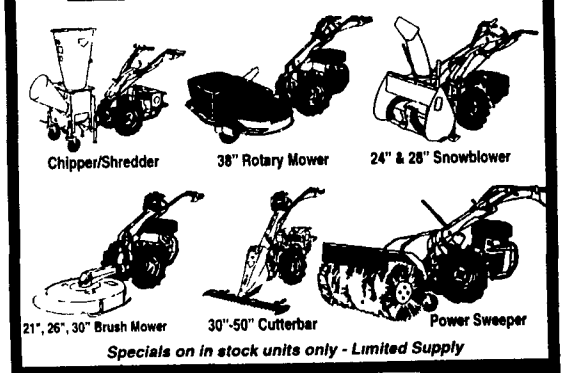

Specials on in stock units only - Limited Supply

22 Years Professional Service
717-738-4215

WES STAUFFER ENGINES & EQUIPMENT

Mon. & Wed. 8-5:30
Tues., Thur., Fri. 8-8 Sat. 8-3
23 Pleasant Valley Rd
East of Ephrata off Rt 322

GREEN VALUE USED EQUIPMENT

GOOD DEALS . . . AND A GOOD DEAL MORE

TRACTORS

New 150 HP JD 7810 MFWD	
New 105 HP JD 7410 2WD	
New 55 HP JD 110 MFWD	
New 8 HP JD 4400 MFWD	~~$48,500~~ $39 900
NEW 55 HP JD 5310 4WD	
JD 7800 MFWD Cab 1,700 Hrs	$59,000
JD 7100 MFWD Cab 2,000 Hr	$48 000
JD 2940 4WD w/ Loader	~~$28 500~~ $19 900
JD 2640 , 145 Loader	$13 500
JD 870 4WD Loader Backhoe	$19 900
Ford 1840 Cab 4WD Loader	~~$33,500~~ $30 000
Case 1690 90 HP	JUST IN
Case 630 NF w/ Loader	~~$4 000~~ $3 000
AC WD Plow & Rear Blade	~~$2,500~~ $2,000
IH 184 Low Step Model	$4,500
New JD 567 Skid Steer SOLD	$17 500
JD 5750 Skid Steer	JUST IN
JD 5706 Skid Steer	JUST IN
JD 1115 111 4WD Compact Tract	
Blade & Tail 2004	~~$18 000~~ $17 000

HAY & FORAGE

JD 935 Mower	$16 000
JD 946 Mower	COMING IN
JD 946 Mower Conditioner	COMING IN
NH 499 Hay Tedder	~~$9 800~~ $9,500
NH 329 Hay Rake	~~$3 000~~ $2,500
NH 258 Hay Rake	~~$1 500~~ $1 000
JD 24 Pull Type Hay Rake	$6,500
JD 14 Tedder	$700
JD 14 Round Baler 20 Series	~~$14,900~~ $11,500
Hesston Round Baler	$4,500
JD Rotary Hoe 8 Row	$500
[illegible]	$2 500 Each
[illegible]	$3,000
NH 411 Hay Rake	$3 500
NH 111 Hay Rake	COMING IN
JD 3 [illegible]	$3,500

DRILLS - TILLAGE

[illegible]	$1 200
[illegible]	$950
[illegible]	$900
[illegible]	$800
[illegible]	$1 500
[illegible]	$800
[illegible]	JUST IN

RECONDITIONED COMBINES

Interest Free Until Sept 1, 1999
Followed by 6 0% Financing

[illegible]	$59,000
[illegible]	$96 500
[illegible]	~~$28 000~~ $27,000
[illegible]	$9 500
[illegible]	
[illegible]	~~$12 500~~ $10 500
[illegible]	~~$23 000~~ $19 500
[illegible]	
[illegible]	$4,500

COMBINE HEADS

[illegible]	~~$10,000~~ $9,500
[illegible]	$3,500
[illegible]	$2 500
[illegible]	$2 500
[illegible]	$1 500
[illegible]	$1 500
[illegible]	$2 500
[illegible]	$3 500
[illegible]	$2 500
[illegible]	$9,500
[illegible]	$4,500

WE UPS PARTS DAILY **NEXT DAY SERVICE**

LOST CREEK IMPLEMENT

JOHN DEERE

Rt. 35 Oakland Mills Pa.
(Between Mifflintown & McAlisterville)
717-463-2161 * 1-800-241-2161

John Deere Signature Care

---

100 KW GENERATOR
Volvo,
Diesel, Phase I
416 Amps, 333 Hrs
$12,500/OBO
215-723-9578

Most of our tractors have low hours!

Coming In
IH 885 w/cab & loader;
AC 7040 w/cab, PS

INT: 3230 w/loader (2) 1486 w/cab 1466 1086 w/cab IH 1066 w/cab 966 885 w/cab 885 4WD w/Loader 686 685 4WD 666 350

JD: 2840 4020 3150 4WD, 3040 w/cab (2) 2640 2555 w/Loader 430 w/Mower & Snowblower Ford 6600 w/cab & side mount bank mower Ford 5000 JD 455E Crawler loader IH TD7E Dozer MF 1085 w/cab AC 6060

Rnd. Balers: NH855, (2) 853 (2) 850 849 Case IH 8450 3440 JD 335

Sq. Balers: NH 316 w/kicker JD 336 w/kicker JD 327 w/kicker H 430 w/thrower

Haybines: JD 1326 Discbine

Grain Drills: IH 5300 Int 5100

Planters. JD 7000 6R (2) IH 56 2R

Manure Spreaders: IH 530, NH 518 NI 363 tandem

Misc.: JD 4420 combine w/13' head MF 13 Grain Head, Brillion seeder Hudson trailer, Bushhog 7T 3pt chisel plow (2) NH 36 flail choppers (3) Hay Rakes (3) sickle bar mowers, Discs 10 20', plows 2 thru 5 bottom hay tedders & inverters

New Farmco Hay Wagons
Farmco Feeders,
Tedders 9 & 17'
Hurst Trailers

From
LEADER'S FARM EQUIPMENT
Everett, PA
814-652-2809
Closed Sundays & Mondays

All Types Of Farm Equipment
Call before you come

New JD Genset 25KW, 4 5 Litre Diesel JD Engine, Skid Fuel Tank, Guages **$10,900** Q

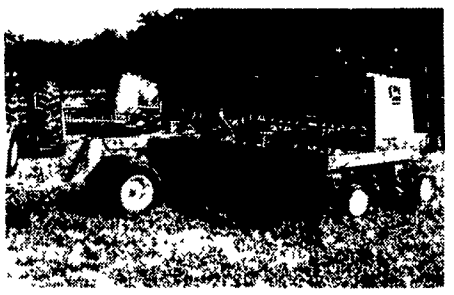

JD 750 no-till drill 15' **$15,900** Q 6345

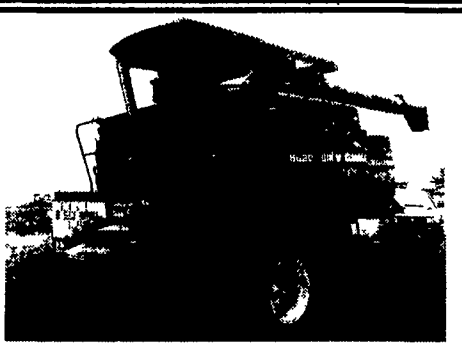

JD 6620 Sidehill Titan II, 2wd, chopper, auto header, 3200 hrs **$35,000** W 2960

USED EQUIPMENT

TRACTORS

			Stock #
JD 8300 MFWD, 1995 2950 Hrs , 4 hyd Dual 20 8x42, 1000 PTO	$75,000	Q	
JD 4620 w/Roll Guard & Canopy	Coming In	W	
JD 4030 w/Cab SOLD	Coming In	W	
Steiger ST210 Wildcat, Single Wheels	$10,000	Q	6429
JD 2355 Rollguard & Canopy	$14,500	W	4211
JD 4020 Side Console, new engines, overhaul, cab, excellent condition, 6017 hs	$15,500	W	
Case IH 7140, 4570 Hrs , duals, 20 8x42, 18 4x26 front	$62,500	Q	6455
Case IH 275 4WD, loader, 1150 hrs	$9,800	Q	6180
Case IH 5220 4wd, 640 Quickie Loader, 1449 hrs	$41,500	W	3827
Case IH 585 2wd loader 1565 hrs SOLD	$14,000	Q	6026
Case IH 275 2wd, 1800 hrs	$8,500	W	3849
Case IH 234 4wd, 60" mower	$8,200	W	3082
JD 1250, 2WD, 1769 hrs , new tires, 100 loader	$13,800	Q	
JD 1050 MFWD w/75 Loader, turf tires, 2423 hrs	$10,900	Q	6301
JD 950 2wd, two (2) to choose from	from $8,000	W	4033, 2278
JD 850 2wd with 72" mid-mount mower	$6,500	W	5226
JD 755 MFWD Turf Tires, 60" Mid-Mower	Coming In	W	
JD 750 2wd w/60" mid-mower	$7,500	W	2283
Ford Jubilee w/Loader	$4,200	Q	6170
IH 656, 8 247 Hrs	$3,500	Q	
IH 484 2wd, 4500 hrs	$5,500	Q	6047
IH 544 w/Loader, 323 Hrs	$8,900	Q	6204
Kubota M7580, 1994, MFWD, 12/12 Rev w/M1275 Loader, 880 Hrs	$23,500	Q	6306
Kubota L4310 MFWD, Loader w/2 Quick-tach buckets, 11 hrs , new warranty remaining	$22,000	Q	6397
Kubota L3250 MFWD, 7 front weights, 1198 hrs ,	$9,000	Q	6361
Kubota 4200 MFWD w/Loader, Turf Tires, 99 Hrs	$18,500	Q	6435
Kubota B2400 MFWD w/60" Mower & Collection Sys , 100 Hrs	$12,000	Q	
Kubota L2900 MFWD w/Loader w/r-4 Tires, 1300 Hrs	$17,500	Q	
Farmall H, two (2) to choose from	$1,800	W	4783, 4213
AC WD w/plow	$1,500	Q	3840

SKID LOADERS

			Stock #
NH L225	$6,500	Q	3322
NH L555	$11,800	W	2056

COMBINES & HEADERS

Interest Rates From 4% - Call For Details!

JD 6620 Sidehill Titan II, 2wd, chopper, dial-a-matic, 3495 hrs	$39,500	W	4967
JD 6620 level land, 2wd, 1982	$25,000	Q	3963
JD 215	$4,900	Q	3964
JD 913	$7,250	Q	3571
JD 915 four (4) to choose from	$7,500	1-O, 3-W	
JD 443	$3,500	Q	6046
JD 643 four (4) to choose from	from $6,500	W	
JD 693 knife stalk rolls	$16,900	W	3602
JD 843 new poly dividers	$13,500	Q	3947

HAY & FORAGE

Interest Rates From 0% - Call For Details!

JD 3970 chopper, 3 row corn head, 1997	$25,000	Q	
NH 790 chopper, 2 row corn SOLD	$10,500	W	2805
JD 1600 Hydro swing Mo Co	$9,800	Q	3629
JD 1327 Impeller Mo-Co	$5,500	Q	2719
JD 820, Exc Cond	$9,900	Q	3056
NH 492 MoCo, Rolls Good	Coming In	Q	
NH 499	$15,000	W	2927
NH 499	$6,500	W	4722
NH 326 baler w/thrower	$9,500	Q	3925
NH 315 baler	$3,800	W	2652
NH 216 Twin rake	$14,500	Q	3922
NH 163 Haytedder, Excellent Cond	$3,800	Q	6318
NH 256 Rake	$2,800	Q	6355
NH 258 Rake	$2,650	W	5864
NH 258 Rake	$2,200	W	5863
NH 56 Rake	$1,250	W	5823
NH 254 Tedder/Rake	$2,100	Q	6410
Kuhn GF 5001 16' tedder	$3,500	Q	
Meyer 4118 forage wagon, tandem gear	Call	Q	
Badger 950 Chuck Wagon	$1,500	Q	6372
Richardton 700 dump cart, demo	Call	Q	4751

PLANTING & SEEDING

			Stock #
JD 750 15' no-till drill	$15,500	Q	3905
JD 750 15' No-till Drill	$16,000	Q	6345
Krause 5215 no-till drill	$8,200	W	4810
Tye 6' No-Till Drill, Like New, Only Used 59 Acres, 3 Boxes	$11,000	Q	6302
JD 7200 6 row, dry fert , monitor, frame-mounted coulters, markers	$15,500	Q	6299
JD 7000 6 row, liquid fert, frame coulters	$9,500	W	4076
JD 7000 6 row, liquid fert, frame coulters	$4,900	Q	3537
John Deere 7000 6 row, liquid fert , frame coulters	$9,500	Q	3539

TILLAGE

Krause 2410 24' Disk w/new blades	$7,500	Q	
JD 110 disk	$1,500	Q	3285
6' disk	$250	W	4953
Glenco 22' Cultivator	$3,600	Q	3110
12' folding harrow	$500	W	4955
Unverferth rolling harrow II, 24'	$4,500	Q	3001

ROTARY CUTTERS & MOWERS

Kuhn GMD77HD disc mower	$3,800	Q	3882
Kuhn GMD 700 GII disc mower, Demo	$6,995	Q	2995
Bush Hog 2510 rotary cutter	$3,800	Q	3465
Rhino 15' rotary cutter	$7,500	Q	3530
JD 709 rotary cutter	$2,200	W	1985
JD 25A flail shredder	$1,200	Q	3968
JD 50 sickle bar mower	$300	W	4210
Numerous 4, 5, 6 & 7 foot economy cutters	from $250		

MISCELLANEOUS

Demco 300 gal sprayer, pto pump, 21' boom, like new, 10 chemicals in tank	$2,500	Q	6479
D 965 running gear	$900	Q	3970
Unverferth 235 grain wagon	$1,750	Q	3305
JD 780 Manure spreader	$4,200	W	5123
Cardinal auger, 6x50	$400	W	2320
New Idea 324 cornpicker, 2 row	$1,800	W	2156
JD 740 NSL loader for 55 series	$6,500	Q	6116

W = Whiteford Location
Q = Oxford Location

JOHN DEERE

Deer Creek Equipment Inc.
Purveyors of Quality

OXFORD, PA 1-800-255-6567 • WHITEFORD, MD 1-800-551-6567 www.dcequip.com

24