ABL[redacted]
ha[redacted]
t[redacted]
4"[redacted]
w/Nel[redacted]

EQUIPMENT PAINTING

610-932-4490

Clay 2250 gal. liquid manure tank w/injectors, used 1 season $5,500

Deutz diesel hyd. power unit, set up to run hyd. submersible pumps, trailer mounted $3,500

717/587-1066

TRAIL AGI-POMPE®

32' AND 42' FOR LAGOONS

GREAT PERFORMANCE IN HOG OR DAIRY MANURE

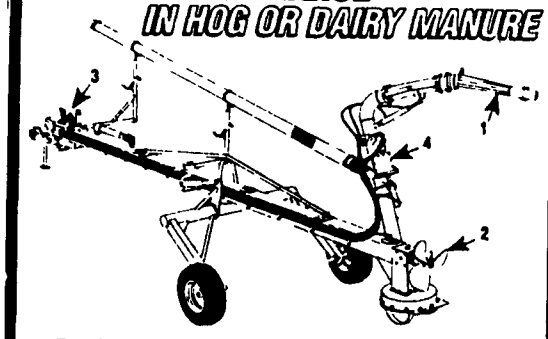

In Stock For Immediate Delivery

1- Highly articulated nozzle designed to slice and break the top crust from above the manure level as the propeller homogenises the liquid with the remaining floating chunks

2- 24" dia mixing propeller providing full time agitation up to 21,500 US G P M even when loading a spreader

3- Hydraulic controls can be operated from tractor seat

4- Rotative directional valve designed to be operated at low R P M without stopping the PTO

Gear box oil bath protected by a greaseable 3 seals mechanism on each shaft.

AVAILABLE WITH MULTIPURPOSE OPTION TO ALSO CLIMB INTO CONCRETE PITS UP TO 14' DEEP.

LAGOON PUMPS & SPREADER TANKS IN STOCK FOR SALE NOW

HOULE FARM EQUIPMENT MANUFACTURER

"We're Here To Serve You"

SNOOK'S EQUIPMENT

RD 3, Box 130, Mifflinburg, PA 17844

717-966-2736

Ask For Ernest Or Dean

FORRESTER FARM EQUIPMENT LTD.

1475 Orchard Rd. Chambersburg, PA 17201

Phone: 717-263-0705

Sales-Parts-Service

[redacted]

NEW HOLLAND

BEST BUYS IN USED FARM EQUIPMENT

Ford 8N w/Loader
Ford 1220 [redacted]er & Mower
Ford 2000 w/Loader, PS
Ford 4000 [redacted]er
Ford 7000
Ford 7840, 2WD
Ford TW25, 4WD, Cab & Air
JD 650, 2WD
JD 2630 w/Loader
Kubota 2250 w/60" Mower
NH L565 S[redacted]ader, 550 Hrs.
NH TR70 Combine
NH 15 ft. Flexhead
Alamo Batwing Mower 15 Ft.
New 6 Row White Cultivator
NH 469 Haybine
NH 479 9' [redacted]e
(2) NH 489 Haybine
NH 770 Chopper w/Hay Head & 2 Row Corn
NH 770 Chopper & Grass Head
NH 354 Grinder Mixer
NI 3632 Manure Spreader
IH Manure Spreader, 1 Yr. Old
NH 791 Manure Spreader w/ End[redacted]Top Beater
NH 795 Manure Spreader
NH 254 Tedder Rake

Located: 1 Mile Off Exit 8, On 696 North To Orchard Rd.

Hours: 8:00-5:00 Mon. Thru Fri. 8:00-12:00 Saturday

THE RELIABLE ONE

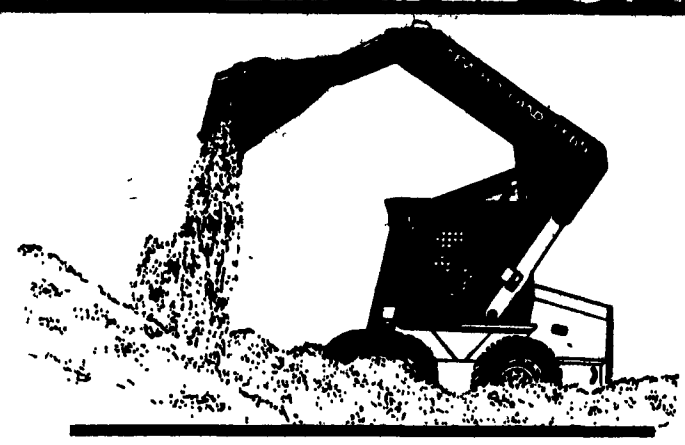

TOUGHER THAN THE REST

The New Holland Model L565 Super Boom™ skid-steer loader is tougher, more durable and more reliable than ever.

The "L565" offers a 40 horsepower diesel engine with an SAE load rating of a powerful 1,500 pounds.

The Pick Up 'n Go™ universal attachment system makes it compatible with New Holland and competitive attachments. The strong boom design and massive loader pins make it more reliable. And the quick engine access makes it easier to service.

See what makes the Super Boom so tough.

NEW HOLLAND

STEADY PERFORMANCE

ON THE JOB DAY-IN, DAY-OUT

New Holland grinder-mixers work hard every day, providing the feeding efficiency you expect from the industry leader.

The rugged harmmermill gives un-matched capacity. Thick plates welded to the 21-3/8" heavy-duty hammermill shaft support the hardened hammers making the mill strong, durable, and smooth-running.

The optional electronic scale more than pays for itself by weighing accurately for more feed efficiency.

Durability...that's why New Holland mills continue to be the market leader.

NEW HOLLAND

Liquid Manure Pit Pumps

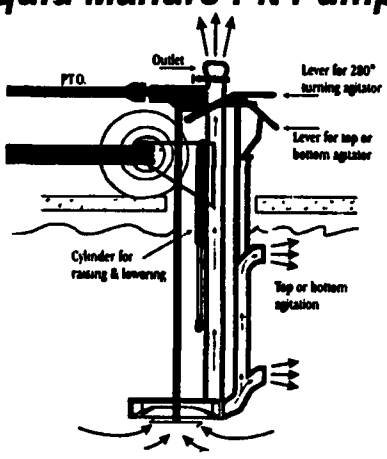

•Available 6-8-10-12 ft. •Trailer mounted mobility
•Hydraulic lift •Simple controls •Soil agitation

- IH 3688 Tractor $17,500
- IH 966 Tractor, hydro $8,500
- IH 766 Tractor $7,200
- Deutz 100-06 Tractor $6,400
- IH 966 Fender $9,400
- (2) IH 806 Tractors ..... Choice $6,600
- IH 1086 Tractor, New Torque, Cab, H/A, Nice $15,500
- IH 1466 Tractor, Cab,H/A, Sharp $11,900
- IH 1456 Tractor, Fender, New Radial Tires, Sharp $9,600
- MF 65 Tractor, Diesel, Engine Completely Rebuilt, Painted $5,400
- JD 3130 Tractor, Cab $7,800
- JD LA, Restored, Plow Cultivators $3,200
- JD A $1,800
- NH 454 Skid Loader (gas) $8,500

- JD 400 Rotary Hoe $1,200
- NH 402 Crimper $1,100

AVCO VM

MILLER'S REPAIR

1 Mile North of Bird in Hand
8 Miles East of Lancaster
Ph. 717-656-6109

Norm Shores & Son Tractor

RR 5, Towanda, PA 18848

717-265-9014

TRACTORS

Ford 7700 w/roll bar
Ford 7600 w/cab, dual power, dual remotes
Ford 6600 4WD w/ Ford QT loader
Ford 5610, 4WD [redacted] Ford QT loader, exc.
JD 4430, cab, air, 77 model,excellent
JD 4240, 4 Pos [redacted] ood condition
JD 4020, Side Console w/roll bar
JD 4020, power shift, side console
JD 3020 side console, '72 model, excel.
Case 2290, cab, air, power shift, very nice
Case IH 695, 4WD w/reverser & 2255 loader
Case David Brown 990 w/Case Loader
IH 1486, cab, air, 79 model, sharp
IH 1086, 1981, Cab & Air, good condition
IH 986, 1981, Cab & Air, good condition
IH 684 4WD, 1981 model, w/2250 loader
White 2-135, cab, air, weights, 2 PTO's, exc.
Oliver 880, NF, PS, gas, w/torque
Oliver 770, WF, PS, gas, late one.

TILLAGE & PLANTING

IH 720, 5x18 spring auto reset
White 508, 4x16 spring auto reset
Bush Hog 1440 Disc, 18' wing fold rock flex
JD 215 13' finishing disc
Knowles 20' transport spring tooth harrow
JD 8350 grain drill, 18x7 w/all 3 boxes

USED HAY EQUIPMENT

NH 489 Haybine, very nice
JD 625 3 Pt. Hyd. Drive Hay Rake
JD 335 round bal [redacted] nice
JD #10 side mounted mower, fits 3010, 3020, etc.

USED FORAGE EQUIPMENT

Hesston 7020 w/ 2R corn head
(3) Dion Forage Wagons
Gehl 1065 Harvester, like new w/2RN corn
Gehl 1060 Harvester w/2 heads
Gehl 970, 3 Beater, Roof, Tandem, like new
JD 3970, electric controls, 7' Hay Head

LOADERS & SKID STEERS

AC 500 Loader, fits 180 & 185 series tractors
Ford 727 loader, fits 4, 5, or 7000 tractors
Freeman Loader for JD Utilities
NH 785 skid steer w/boom hyd., good condition
Dual 205 loader, fits Ford 7710 or others

MISCELLANEOUS

Complete Auger fil [redacted] 000 6RN
Stoltzfus 5-ton wet [redacted] eader
NI 325 2RN Picker, late one, very nice

SPRING SPECIALS

(as is, no trade prices)
Oliver 1850 dsl, $4750
Ford 7600 w/factory cab, $8300
JD 716, 3 btr, tandem roof wagon, $2900
Bush Hog 18' rock flex disc, $4500
Hesston 7020 w/2R head, $1500
JD 8350 18x7 drill, $1950
18.4x38 snap-on duals, $500

Delivery & Financing Available

Quality Used Equipment For Sale

- NH 770 Harvester
- NH 892 Harvester
- NH 849 Round Baler
- JD 1219 Mower Conditioner Less Than One Year Old
- (2) NH L553 Skid Loader
- AC K Combine, 3 RN & 2RW Corn Heads
- (3) NH 489 Haybines
- NH 495 Haybine
- JD 327 Baler
- IH 244 Tractor, w/Quick Way Front Mounted Blade, 300 Hrs.
- AC 7020 Tractor (Engine Overhauled)
- Zimmerman Forage Box, 16 Ft. w/Roof Hyd. Drive 3 Beaters, 12-Ton Tandem
- NH 258 Rake [redacted]
- NI 4151 Rake
- NH 326 Baler
- NH 1037 Bale Wagon
- (2) NH 411 Discbines (Price Greatly Reduced)
- AC2600 16 Ft. Disc Harrow

BHM FARM & LAWN EQUIP.

SALES • PARTS • SERVICE

[redacted] North of Annville, PA

Telephone 717-867-2211