Linden Lawn Farms
301-263-9801

JD 8640
3200 Hrs., 3 Pt.,
PTO, 20.8-38 Duals
$26,000

Brillion
30 Ft.
Wing Packer
$2,750
NJ
(908) 782-9718

IH TRACTOR PARTS
Including Crawler & Construction Parts
BATES CORPORATION
14th AND FIR RD., BOURBON, IN 46504
PARTS DISMANTLED, CLEANED & READY FOR SHIPMENT
WE SHIP UPS, TRUCK, BUS
Best Prices on Factory Rebuilt TA's & Clutches
NEW REPLACEMENT PARTS
CALL THE IH PARTS SPECIALISTS
TOLL FREE 1-800-248-2955

Flatbed Hay Wagon w/Gears, 8x16 Bed, Good Condition $500
165 Bushel Gravity Bin Wagon w/8 Ton Gears and Adjustable Tongue, Like New Condition $1,200
200 Bushel Killbros Gravity Bin Wagon w/8 Ton Gears and Adjustable Tongue, Like New Condition $1,500
Call After 9 P.M. Ask For Brian, Chester Co.
215-696-1491

ATTACHMENTS for Skid Steer Loaders

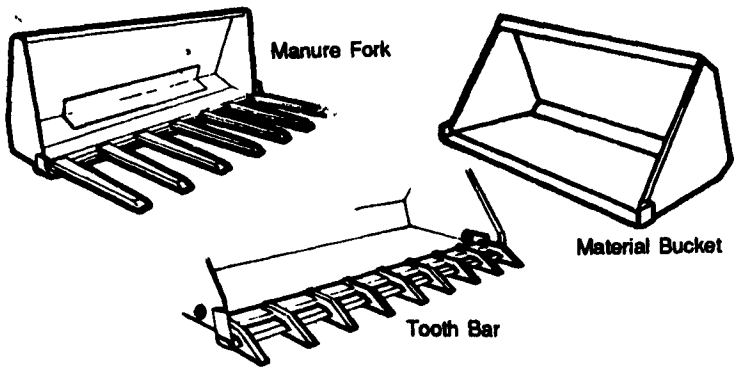

- Standard or Custom Sizes
- Hardened, Beveled Edge
- 7 gauge Material (other gauges available)

Call for a Quote!
PA (717) 354-8721
US (800) 342-0905

ATI CORPORATION
325 West Main St., New Holland, PA 17557

MISCELLANEOUS

1973 Ford 8000 Truck Tractor, 1160 Cat diesel, used last 8 years in our business, has wet line, recent inspection and good rubber
Used Engine Block For JD 5010
New Material Buckets To Fit JD Loaders 145-146-148-158 48-58 in stock
354 Perkins Engine Parts
(1) 12' 3 Pt. Power Rotary Hoe

NEW WHITE TRACTORS

White 145 4WD
White SOLD 4WD
Duals to fit White 170 or 195 20.8Rx42 used 40 hrs.
White 6105 4WD w/ Cab

TILLAGE

(1) Used Oliver 6 Bottom Plow, Spring Automatic Reset Bottom
New SOLD 4R 378
New White 6R 378 Row Crop Cultivators
2 Used Kewanee 273 Field Cultivator, 18' Nice
New White 256 disc, 12'8"
New Kewanee 1175 disc, 18' SPECIAL PRICE
1 Used Brady field cultivator w/rake, 13'

PLANTERS

1 Used IH 400 6R Dry Fertilizer
1 Used White 5100 4R Corn Planter- No Fertilizer
(1) Used AC 600 4R

HARVESTING EQUIPMENT

Oliver 620 Baler w/Thrower, Nice
(1) Used JD 1219 Mower Conditioner, like new
New Hay Tedders
New Bale Wagons

KÄRCHER
High-Pressure Washers.

The #1 Line Of Pressure Washers In The U.S.A. They Have Features Reliability & Longevity That The Competition Can't Touch

USED TRACTORS

Used JD 2555 4WD, 430 Hrs.
Used White 2-155 2 Wheel Drive w/Cab
(1) Ford 4000 Diesel, Select-O-Speed 13.6x38 Rear Tires
JD 414 Power unit w/clutch & shut down switches

STOP IN TO SEE THE LITERATURE AND PICTURES OF THE
1 NEW 6175
4 WD-SOLD
NEW WHITE 6100 SERIES, FULL POWER SHIFT TRACTORS!
STATE OF THE ART TRANSMISSION!
A TRUE LEADER OF THE FUTURE!

G&D FARM EQUIP. CO.
MANHEIM, PA. • 717-664-2207

Offering Over 60 years combined mechanical experience to our customers

AGCO White
White Farm Equipment
Cummins Engines B&C Series
White Outdoor Products
Kewanee Tanaka Salemark

1344 N. Penryn Rd.
Manheim, PA 17545
717-664-2207

We Take Pride In Our Work

Parts Daily By U.P.S.

J.L. HOLLINGER & SONS INC.
RT. 72N, Manheim, PA.
717-664-2444 717-665-2354 FAX 717-664-2835
NEW & USED Farm & Construction Equip.

1980 Case 580C TLB w/ROPS Canopy Standard Hoe, 2800 Hrs.
$11,750

Case 855D Crawler/Loader w/ROPS Canopy & Sweeps, GP Bucket, VG Cond.
$19,500

SKID LOADERS

Case 1835C cab enclosure $10,900
1985 Case 1845B, big rubber w/engine problem $4,950
Case 1845C, aux. hyd., very good cond. $12,500

BACKHOES

JD 310C TLB, 4WD, cab, standard hoe, VG cond. $27,500
Case 580K, 2WD, cab, extend-a-hoe, low hrs., runs & operates VG $26,500
1980 Case 580C TLB w/ROPS canopy, standard hoe, excel. cond. $11,500
1985 Massey Ferg. 30E TLB w/full cab, standard hoe, excellent cond. $12,500
JD 310A TLB, w/ROPS canopy, standard hoe, good cond. $11,500

LOADERS

Ford A64 4WD wheel loader w/full cab, GP bucket, excellent $18,500

FARM TRACTORS

IH 460 diesel engine, runs good $2,350
(2) MF 1105 w/full cab, 3 pt. hitch, PTO, TA, both very good cond. ..... $8,500/ea.

CRAWLERS

MF 300 crawler, straight tilt blade, VG cond. $8,500
1973 JD 450B, 6 way angle blade, ROPS canopy, sweeps, excellent $10,500
1988 JD 450G, 6 way angle blade, 900 hrs. $38,500
JD 350 crawler loader, GP bucket, good U/C, runs & operates good $7,750
Case 855D Crawler/Loader w/ROPS canopy sweeps, GP bucket, runs & operates VG $19,500
JD 350B Crawler Loader, GP bucket, winch, runs & operates very good $8,750
1983 Cat 931B, crawler loader w/4N1 buckets, like new cond. ..... Call

MISCELLANEOUS

JD 70 excavator, full cab, VG U/C $25,500
Onan 10KW generator, 2 cyl. Onan gas engine, excel. $1,550
Miller portable welder $2,250
Raygo Model 120 asphalt paver w/dsl.engine, track drive, VG condition $7,750
P&H Hydraulic Excavator powered by Detroit diesel, good cond. $6,500
Gallion 503 motor grader, Detroit diesel, cab, very good cond. $8,750
Oliver forklift w/14' mast, gas, good tires, runs & operates good $3,800

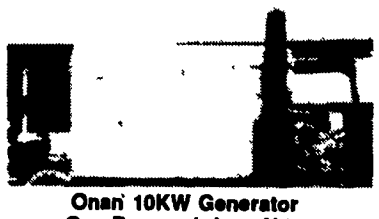

Onan 10KW Generator Gas Powered, Low Hrs.
$1,550

JD 70 Excavator w/Full Cab Wain-Roy 24" Bucket, Excellent
$25,500

CONVEYOR CHAIN
For Every Make & Model

Manure Spreaders

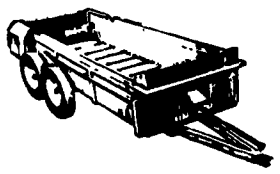

Make	Model	T-Bar Price	Pintle Price
Badger	160	314.51	293.49
Gehl	350	335.09	307.12
H&S	180	355.46	328.91
IH	530	289.53	284.16
JD	40	315.34	290.61
Kasten	250	428.31	402.76
Massey	205	390.32	364.67
NH	518-518	370.87	345.76
NH	679	491.23	463.24
NH	790-791	501.73	526.51
NI	218-244	457.27	416.21
Patz	181	358.62	332.79

Feed Wagons

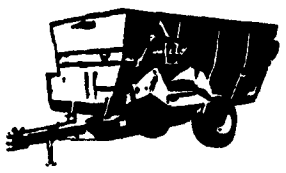

Make	Model	Main Conv. Price	X-Conv. Price
Artsway	700,800	1670.00	
Artsway	750,850	1687.00	
Butler	180		294.51
Butler	320		297.51
Gehl	190	399.01	
Gehl	7190-7500		197.51
Henke	KwikMix		148.51
Schuler	170	400.01	
Schuler	260	750.01	
Schwartz	7805		206.01
Weaverine	430	68.51	
Wic	45	74.01	

Forage Boxes

Make	Model	Main Conv. Price	X-Conv. Price
Badger	950-14	216.51	104.69
Dion		236.06	—
Gehl	610-640	213.06	—
Gehl	700-960	216.71	100.68
IH	105,110	208.86	—
IH	130	220.93	—
JD	110	325.86	109.61
JD	214	208.46	119.09
JD	714	211.12	136.52
Kasten	PB16'	210.28	—
Lamco	Rex	212.95	90.52
NH	6	214.01	86.79
Papec	140	212.41	—

SPROCKETS

BEARING UNITS

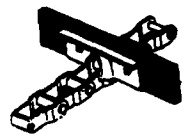

SINGLE CONVEYOR CHAIN

With Rubber Paddle 10¾"
667H For Butler, Jamesway, Clay, Etc. **$5.98** Per Ft.

Shaft Dia.	Pillow Blocks	Two-Bolt Flange	Square Flange	Take-Up Units
¾	10.79	10.79	10.79	16.86
15/16	11.64	11.64	11.64	18.12
1	11.64	11.64	11.64	18.12
1 1/8	15.28	15.28	15.38	21.30
1 1/4	15.28	15.28	15.28	25.84
1 3/8	18.18	18.18	18.18	26.84
1 1/2	21.38	21.38	21.38	30.87
1 3/4	23.60	23.60	23.60	33.56
2	36.66	36.66	36.66	50.03

STANDARD ROLLER CHAIN RIVETED

Chain No.	Chain Pitch	Single Strand	Double Strand	Triple Strand
25	¼"	1.44	10.18	14.79
35	3/8"	1.80	2.22	4.11
40	1/2"	1.10	2.36	4.67
41	1/2"	.51	—	—
50	5/8"	1.84	3.33	6.73
60	3/4"	1.80	4.02	8.97
80	1"	3.20	6.06	17.01
100	1¼"	7.45	16.28	36.15
120	1½"	9.38	19.48	40.49
140	1¾"	11.80	24.64	46.70
160	2"	13.81	28.38	63.44
180	2¼"	20.51	46.17	103.48
200	2½"	30.36	60.52	140.66
240	3"	70.36		

NEW ANSI COTTERED

Chain No.	Chain Pitch	Single Strand	Double Strand	Triple Strand
60	¾"	4.00	7.83	19.12
80	1"	6.91	11.84	19.07
100	1¼"	8.92	19.73	32.73
120	1½"	10.87	22.40	—
140	1¾"	13.44	30.32	54.90
160	2"	16.62	32.00	67.83
200	2½"	44.57	106.86	163.88

PRATT INDUSTRIES
CALL FREE 800-342-3522 - 800-392-3377

ALL MFG'S NAMES, NUMBERS, SYMBOLS, DESCRIPTIONS AND PRICES ARE USED FOR REFERENCE PURPOSES ONLY AND IT IS NOT IMPLIED THAT ANY PART LISTED IS THEIR PRODUCT