York Co. DHIA

(Continued from Page E14)

Ellis Crowl						
Lori	3	6-6	305	18,469	3.9	729
Sinking Spring Fminc						
Marie	3	8-10	305	21,418	3.8	817
Mattie	3	4-11	305	23,314	3.6	851
Woolsy	3	4-5	305	22,112	3.1	704
Rutter Bros						
Patty	2	8-11	305	13,637	4.8	663
Bear	2	6-6	305	18,938	4.5	854
Beshore Farms						
Leah	3	5-5	305	22,323	4.0	910
Lauren	3	3-1	305	21,939	3.0	676
Harold Brown						
Glamour	3	4-2	305	22,943	3.4	782
Gum Tree Farm						
Jinx	3	4-0	305	21,944	3.5	787
Jake	3	3-6	305	17,853	4.0	715
Elwood T Krick						
511	3	6-1	305	19,038	3.8	727
Leaspring Farm						
Fuzz	3	4-6	305	20,641	3.4	707
Dame	3	5-6	305	21,991	3.2	711
Rosy	3	4-4	305	19,597	3.6	721
Thomas A Boyer						
Julie	3	4-5	297	20,446	3.7	772
Kitten	3	3-3	305	17,427	4.0	699
Earl Fuhrman						
187	3	3-5	305	16,870	4.1	704
Dorrie	3	2-4	305	20,001	3.2	650
Corella	3	2-3	299	17,982	3.6	650
224	3	2-6	305	19,803	3.3	657
Furnace Creek Farm						
1	3	8-9	305	21,346	3.2	694
116	3	7-7	305	19,967	3.2	652
HS&RE Fetrow						
May	3	5-9	305	23,539	3.4	816
Bell	3	2-4	305	23,161	2.9	690
Rodman C Thompson						
Nan	3	4-9	305	22,066	3.2	706
Marcie	3	3-1	305	20,458	3.4	712
RR&MR Stewart						
Pep	3	3-8	305	18,000	3.6	659
Topper	3	3-6	305	18,241	3.5	650
Terri	3	2-7	305	20,845	3.5	734
Smysers Richlawn Fms						
Girtie	3	3-6	305	28,124	4.0	1133
Beulah	3	2-6	305	21,630	3.2	702
Buddy	3	2-5	305	23,637	3.7	894
Dina	3	2-2	305	23,186	3.3	771
Pearl	3	2-6	305	22,432	3.6	817
Viv	3	1-11	305	20,451	3.2	672
T Edwin Johnson						
Sunset	3	9-2	305	20,799	3.8	801
Faith	3	4-10	305	16,285	4.0	660
Mart	3	3-3	305	15,045	4.6	706
Wink	3	2-9	305	19,839	3.6	720
Leroy Bupp						
Patches	3	4-9	305	17,768	4.0	713
Lynn Wolf						
Melba	3	6-0	270	22,500	3.7	849
Ora	3	4-3	305	19,768	3.6	713
Rebecca	3	1-10	305	20,987	3.5	750
Peachy	3	2-4	305	22,874	3.8	876
Quail	3	2-0	305	16,979	3.9	673
Ramsey S Cooper Jr						
Vivian	3	4-9	305	19,163	3.4	662
Wilma	3	5-10	305	16,754	4.0	678
Melvin R Lehr						
17	3	4-2	277	20,904	3.9	817
54	3	3-11	305	19,262	3.9	763
32	3	3-4	289	16,044	4.0	653
Elvin R Deiter						
Yukon	3	3-1	305	16,204	4.1	673
Wayshar Farm						
Marion5	3	8-2	305	18,556	3.9	735
57	3	7-0	305	22,295	3.0	682
Dot	3	6-8	305	19,425	3.6	717
Kenneth L Rexroth						
129	3	8-0	305	19,866	3.5	707
71	3	4-4	305	21,520	3.6	775
114	3	3-1	305	21,002	3.2	684
Donald Wilson						
70	3	7-4	305	16,182	4.1	678
Rick L Cook						
107	3	4-7	264	21,065	3.5	752
J Donnell Taylor						
Helen	3	9-8	305	20,144	3.2	651
Anna	3	5-9	305	20,412	4.7	967
Silver	3	2-11	305	17,893	3.8	683
Bupplynn Farms Farm2						
Mitzi	3	7-2	305	23,487	3.3	783
Elvin G Molison						
153	3	4-9	305	18,588	3.6	669
Mervin W Hertzler						
Kate	2	3-4	305	12,909	5.0	656
Dina	2	2-10	305	16,687	3.9	665
Gary W Thoman						
Donna	3	6-7	305	21,135	3.8	813
Cristin	3	5-0	305	23,400	3.9	915
B Robert Charles						
Hyacint	3	7-0	305	16,732	4.0	678
Edwin L Calhoun						
Golly	3	4-2	305	23,063	3.2	751
Indian	3	2-1	305	20,023	3.2	657
Circle Creek Hol						
Naomi	3	6-0	305	19,355	3.7	719
Sasha	3	4-8	305	19,052	3.5	673
Cricket	3	6-6	297	20,043	3.7	747
Mindy	3	8-5	305	18,949	3.9	755
Robert W Mays						
20	3	3-7	292	16,858	3.9	670
37	3	2-10	305	16,423	4.6	756
47	3	3-3	305	17,561	4.1	729
David L&Chris Druck						
120	3	8-5	305	20,609	3.2	670
Big T Holsteins						
Lori II	3	6-6	293	17,916	3.9	703
Bisket	3	3-5	276	17,644	3.7	664
Oofy	3	3-9	298	20,836	3.7	787
Perrydell Farms						
223	3	3-10	305	26,342	2.8	757
David Stewart						
Mary28Y	3	5-4	305	24,643	3.1	765
Bert135	3	2-11	305	15,274	4.3	665
Myron R Pomraning						
11	3	3-10	305	15,667	4.3	682
Double D Farm						
228	3	8-7	305	17,656	4.3	769
278	3	5-0	254	14,871	4.5	671
288	3	5-2	290	18,720	3.6	689
Deal Holsteins Farm						
50	3	6-6	305	23,400	3.2	764
George Innerst&Sons						
15	3	6-0	305	21,066	3.3	713
76	3	2-5	305	16,114	4.2	690
Jim&Holly McCaffree						
Marion	5	10-2	305	19,202	3.8	747
William Myers						
Jolt	3	3-1	305	20,659	3.3	694
Happy	3	3-3	305	24,083	2.8	695
Leonard Greek						
Mindy	3	5-9	247	21,145	3.8	803
Hopewell Center Farm						
33	3	4-0	305	18,838	4.1	781
Shelbud Holsteins						
Buffy	3	6-9	305	20,631	3.2	669
Ellen	3	5-8	305	24,474	3.1	779
Dixie	3	5-8	305	24,264	2.8	700
Ruth	3	4-1	305	18,459	4.1	764
Cecelia	3	4-1	305	22,162	3.1	692
Getty	3	3-7	305	19,322	3.5	677
Jixie	3	3-3	305	22,578	2.9	655
Jellen	3	2-2	305	20,897	3.5	746

(Turn to Page E18)

Free Milk
at Lebanon Valley National Bank

In honor of National Dairy Month, Lebanon Valley National Bank's agricultural loan professionals and LVNB-area farmers invite you to enjoy a refreshing glass of milk at our Womelsdorf, Myerstown, Schaefferstown, Pine Grove, Ephrata and Warwick Center offices.

Milk's the One. . .and you are too! We're ready to serve your agricultural banking needs.

LVNB AgriGroup:
Mike Firestine—Sr. Agricultural Loan Officer
Bob Donaldson—Agricultural Loan Officer
Sean McKinney—Agricultural Loan Coordinator

Agricultural Loan Office: 274-6906

LVNB Lebanon Valley National Bank
Member F D I C Equal Opportunity Lender
Corporate Headquarters: 555 Willow Street
Lebanon, PA 17042

John Deere Diesel Headquarters

New Diesel Tractors Just Arrived!

(770 Series)

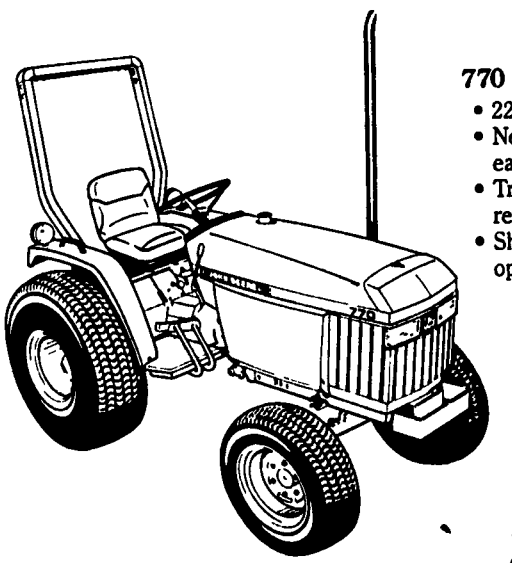

770 Compact Utility Tractor
- 22.5-hp, 3-cylinder engine, 20 PTO hp
- New styling with engine side shields that remove easily for servicing
- Transmission-driven or continuous live 540-rpm rear PTO available
- Shift-on-the-go mechanical front-wheel-drive option

With -
4 Wheel Drive
Turf Tires
Power Steering

770 Compact Utility Tractor

$8,699.00
Cash Only

JOHN DEERE Nothing Runs Like a Deere®

717-664-4663 ELM, PA

Bomberger's

Mon., Thurs & Fri till 9 00 • Tues. & Wed. till 6.00 • Sat till 5 00