FARM EQUIPMENT

FARM EQUIPMENT

FARM EQUIPMENT

VERMEER

TRIPLE H EQUIPMENT

Peach Bottom, PA

717-548-3775 or 548-2094

Vicon

ROUND BALERS

1-2400 IH, used	$4500
1-605 C, used	$3600
1-605 E, used	$3800
1-504SF, new	$8400
2-605 H, new	$9600
2-504H, new	$9200
1-504SG, new	$7595
RP 1500, demo	$10,200
RP 1200, demo	$8,700

TWIN RAKES

2-R23B, hyd.	$6000
1-R21A, used	$2800
2-H1240 V-rake	$2100
1-H1240, used	$1200

"Special For This Week"

Used John Blue 1000 gal. gal. tandem axle, all hyd. fold lift, agitation and dye marker

$6,500

SEEDERS - SPREADERS

400 lb. up to 2400 lbs. in stock

"Special"

15% Discount until February 10

Call for Specials on all Vicon Equipment

Tired of Being Overcharged?

THE BATTERY WAREHOUSE

offers a complete line of factory fresh **top quality** batteries for all of your farming needs at everyday **low low** prices.

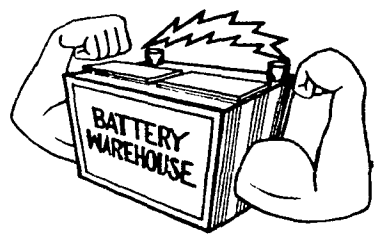

Now Featuring Our Group 1 6 volt At

$29.95 Exch.

440 Cold Cranking Amps 3 Yr. Standard Warranty

(Our Most Pop. 6 Volt Fits Many Old Farm Tractors)

We Specialize In "Hard To Find" Industrial Batteries

Passenger Car Batteries As Low As

$29.95 Exch.

FOR MORE INFORMATION - STOP IN OR CALL ONE OF OUR MANY CONVENIENT LOCATIONS

THE BATTERY WAREHOUSE

6100 Allentown Blvd.
on Rt. 22 East
Harrisburg, Pa. 17112
(717) 652-0565 or 0566

5240 Simpson Ferry Rd.
Windsor Park Shopping Center
Mechanicsburg, Pa. 17055
(717) 697-4414 or 4415

110 Lundy Lane
Geistown Clover Leaf
Johnstown, Pa. 15904
(814) 266-7807

3108 Pleasant Valley Blvd.
(Next to Dunkin Donuts)
Altoona, Pa. 16601
(814) 942-2888 or 2914

1115A Maugans Ave.
Hagerstown, Md. 21740
(Immed. of I-81 - Maugans Ave. Exit)
(301) 791-7780 or 7781

837A Balt. Blvd. Rt. 140
Westminster, Md.
From Baltimore
(301) 876-7188
From Westminster
(301) 857-4566

Complete Price Sheet Available Upon Request

FARM EQUIPMENT

FARM EQUIPMENT

Special of The Week:

ENERGY FREE FIBERNETICS WATERER

Introductory Offer Till Feb. 10th

Less 15% Plus Freight

FREE From Minn.

EQUIPMENT FOR SALE OR LEASE

BADGER
3,000 gal. liquid manure tank
1,500 gal. vacuum tank
205 Bushel Manure Spreader
Forage Wagons
Forage Blowers
Bedding Chopper for Mulching
Persuader Pump agitator for Lagoons
Handy High Pressure Washers

Oswalt Mix Wagons
Grain Drill with band seeder
Also:
Registered Holstein Bulls

SHOW-EASE STALL CO.

573 Willow Rd. Lancaster, Pa.
Ph: 717-299-2536

HORST FARM WAGONS

Horst Wagons with the honest ton rating and no sway framing

4 models to choose from — 4, 8 10 and 14 ton capacity

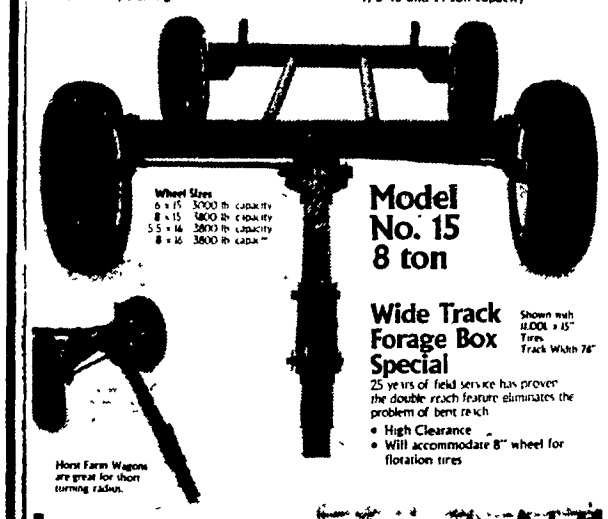

Model No. 15 8 ton

Wide Track Forage Box Special

Shown with 11.00L x 15" Tires. Track Width 76"

25 years of field service has proven the double reach feature eliminates the problem of bent reach

- High Clearance
- Will accommodate 8" wheel for flotation tires

Horst Farm Wagons are great for short turning radius.

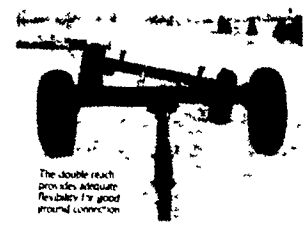

The double reach provides adequate flexibility for good ground connection

John N.M. Zimmerman
RD 6
Lebanon, Pa. 17042
Phone: 717-933-8181
or
717-933-4032

ATTENTION FARMERS:

Tross Terrains, Inc. has decided to cease farming. We are offering the following equipment and supplies for sale. Please Note! Our equipment has been kept in a like new condition. You can save many dollars by purchasing this equipment at a fraction of new cost.

Located on Rt. 890, six miles south of Sunbury.

Phone 717-286-6411 or 717-286-0215

- 1978 John Deere Model 6600 Combine, Side Hill, 1550 hrs. w/643 - 6 row corn head & 215 - grain platform
- 1976 John Deere 4430 Tractor, Quad-Range, 2000 hrs. Cab - Air, new radial tires
- 1976 John Deere 4230 Tractor, Power shift, 40 hrs. since major Cab - Air, new radial tires
- 1979 John Deere 2840 Tractor, 1256 hrs.
- Model 125 John Deere Skid Loader
- John Deere Model 8300 grain drill (new) includes press wheels for soybeans
- John Deere Model 7000 conservation liquid 6 row corn planter
- John Deere 450B Dozer - 6 way blade, recent overhaul
- John Deere Model 1010 21'-0" hydraulic fold field cultivator (harrow)
- John Deere Model 950 roller harrow
- John Deere Model 1710 10'-0" mulch tiller
- John Deere Model 2600, 6 - 18" moldboard plow
- John Deere Model 310 disc
- John Deere Model 680 400 bu. manure spreader
- John Deere 200 gal. saddle tanks
- John Deere Model 1508, 15'-0" rotary mower
- John Deere Model 350 mower 7'-0" cutter bar
- John Deere fast hitch for category 2 or 3
- Lely 3 point hitch fertilizer spreader
- Westgo 6 row crop cultivator
- Willmar stainless steel Super 500 fertilizer spreader
- Woods 84" 3 point hitch rotary mower
- Bale Wagons - three 8'-0" x 20'-0" x 8'-0" beds
- Unverferth McCurdy 400 bu. center dump gravity wagons - 2
- Donahue 8'-0" x 28'-0" equipment trailer
- Demco 1000 gal. fiberglass nurse tank w/3hp 1½" Brigg & Stratton pump
- Poly tank 1000 gal. on 8 ton running gear w/3hp 1½" Brigg & Stratton pump
- Century 200 gal. 3 point hitch sprayer with PTO pump
- N.H. 479 Haybine
- N.H. 256 Rolabar hay rake
- N.H. 276 Hayliner Baler w/Gandy hay preserve applicator
- Grimm Hay Tedd - aerator
- Southeast 3 point hitch round bale carrier
- Danuser hydraulic post hole digger
- Winco Generator on trailer single phase 146 amp
- Tool bar
- Pair 18.4 R38 Dual tires
- New Idea 32'-0" grain elevator
- 1971 Ford 8000 225 cat 19,466 miles since overhaul, 22'-0" Knapheide grain box
- 1978 Jeep CJ20 pickup - 34,000 miles 4,000 lb. tilt bed equipment and cattle trailer
- Moritz cattle trailer
- Bulk Feed bunk - 14'-0" Marting Mfg., Inc. Smidley Equip.
- Snyder 500 gal Argri - tank
- Dickey John - Radar sensor liquid sprayer control
- Dickey John - Planting monitor
- Baler twine - 18 balls
- Timothy - five 50 lb. bags
- 10 gal. 24D Amine
- 55 gal. Lasso
- 10 gal. Guthion 2S
- 7 gal. Dinitro weed killer
- 4 gal. Basagran
- 12 gal. Paraquat
- 13 gal. Agri Dex
- 3 gal. Weedar MCPA
- 7 gal. Weedar 64
- 4 gal. Mix Aid
- 16 gal. Banvel
- 11 gal. X-77 Spreader
- 36 units 5 bu. Soybean innoculator
- 5 - 10 lb. bags AAtrex Nine-O
- 27 gal. Bladex 4L
- 10 - 50 lb. bags Furadan
- 35 gal. Furadan 4 Flowable
- 15 gal. Nature's Mag. Chelate solution
- 8 gal. Nature's iron chelate
- 50 gal. Bicep
- 8000 gal. Nitan
- Spencer Losch Boiler Model LC450 - 1,215,000 BTU
- Hygroponic Greenhouse - 30'-0" x 124'-0"

TROSS TERRAINS, INC.

P.O. Box 511 R.D. 3
Sunbury, PA 17801