AREA OF ANIMAL USE	NUMBER OF HEAD PER 12' PEN 12*	15*	18
	AVAILABLE ANIMAL AREA FT²/HD.		
RESTING SHELTER[1]	17.8	14.3	11.9
FEEDING SLAB	7.8	6.2	5.2
TOTAL SLOPED FLOOR	25.6	20.5	17.1
LITTER ALLEY	8.8	7.0	5.8
TOTAL ANIMAL AREA[2]	34.4	27.5	22.9
	AVAILABLE FEEDING SPACE IN/HD		
FEED BUNK	11.5	9.2	7.7

*POPULATIONS OF 12 TO 15 HEAD PER PEN, DEPENDING ON ANIMAL SIZE, ARE RECOMMENDED.
[1] DOES NOT INCLUDE FEED BUNK ROOF SHELTER
[2] TOTAL ANIMAL AREA IS 68% ROOFED

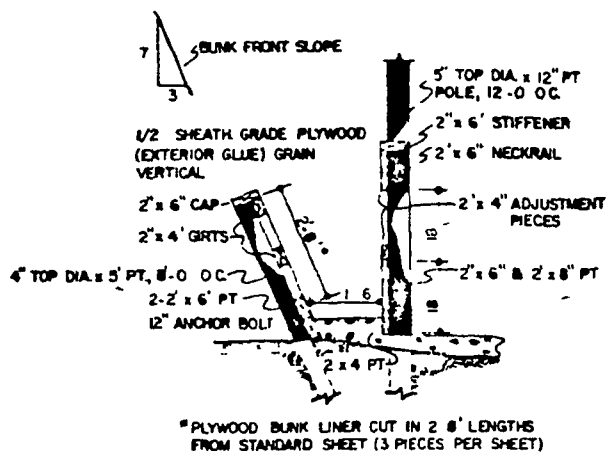

*PLYWOOD BUNK LINER CUT IN 2 8' LENGTHS FROM STANDARD SHEET (3 PIECES PER SHEET)

BUNK DETAIL

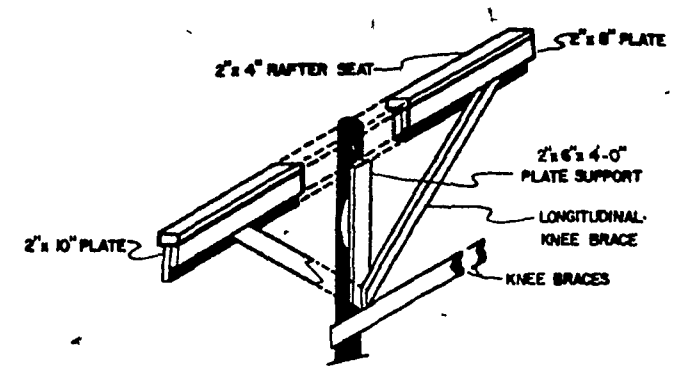

PLATE DETAIL
NO SCALE

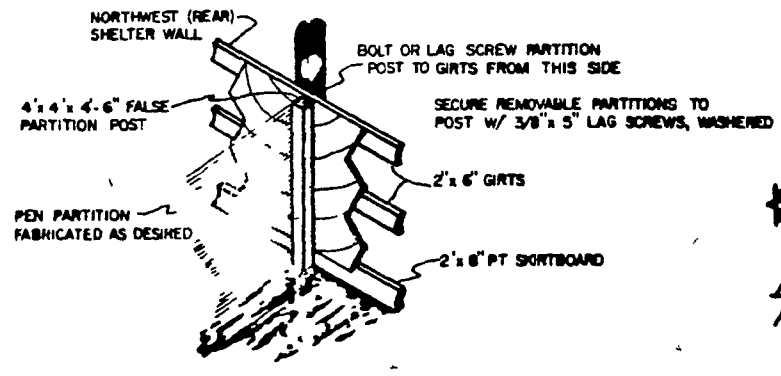

PEN PARTITION WALL
NO SCALE

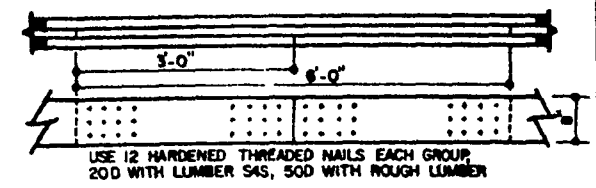

SPLICED RAFTER NAILING SCHEDULE
NO SCALE

GATE SCHEDULE

GATE	LENGTH	FUNCTION
A	—	HEAD CATCH
B	8'	CROWDING GATE
C	5'	ACCESS/EXIT GATE
D	2'	MAN GATE
E	2' 6"	MAN GATE
F	12'	PEN GATE
G	14'	BLOCKING GATE
H	12'	LITTER ALLEY GATE

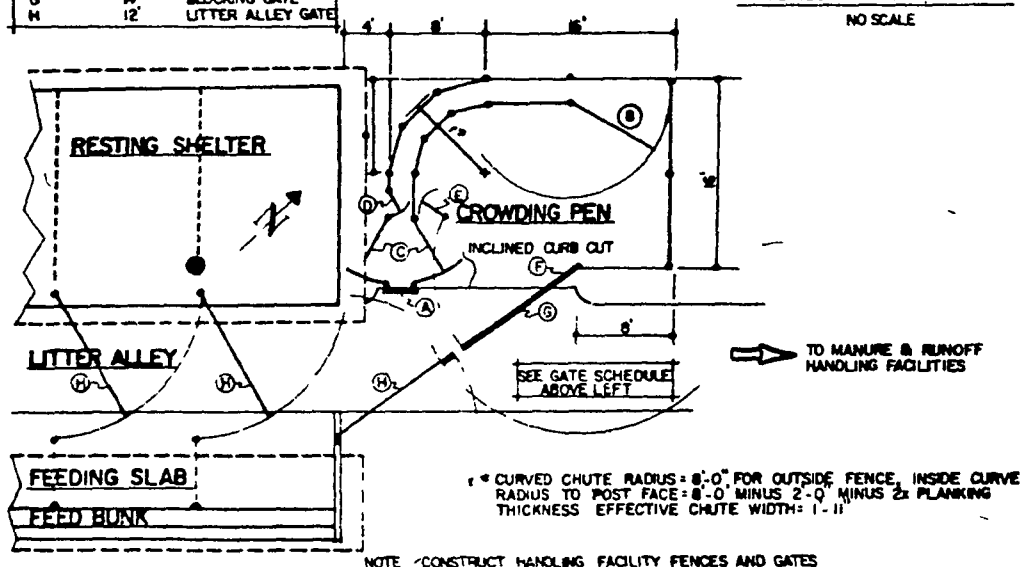

* CURVED CHUTE RADIUS = 8'-0" FOR OUTSIDE FENCE, INSIDE CURVE RADIUS TO POST FACE = 8'-0" MINUS 2'-0" MINUS 2x PLANKING THICKNESS EFFECTIVE CHUTE WIDTH = 1'-11"

NOTE: CONSTRUCT HANDLING FACILITY FENCES AND GATES PER PLANS C 524, C 599H, OR OTHER AS DESIRED

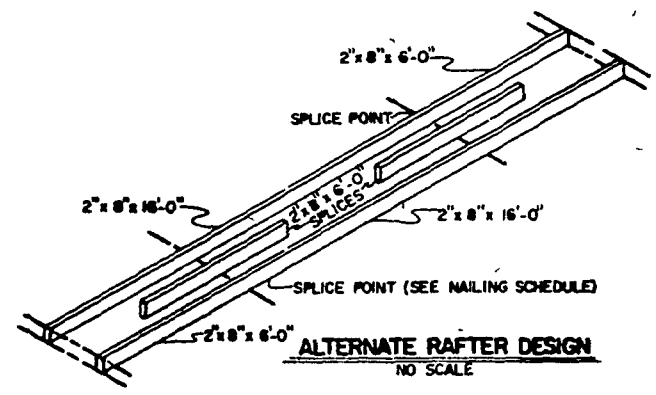

ALTERNATE RAFTER DESIGN
NO SCALE

HANDLING FACILITIES ARRANGEMENT

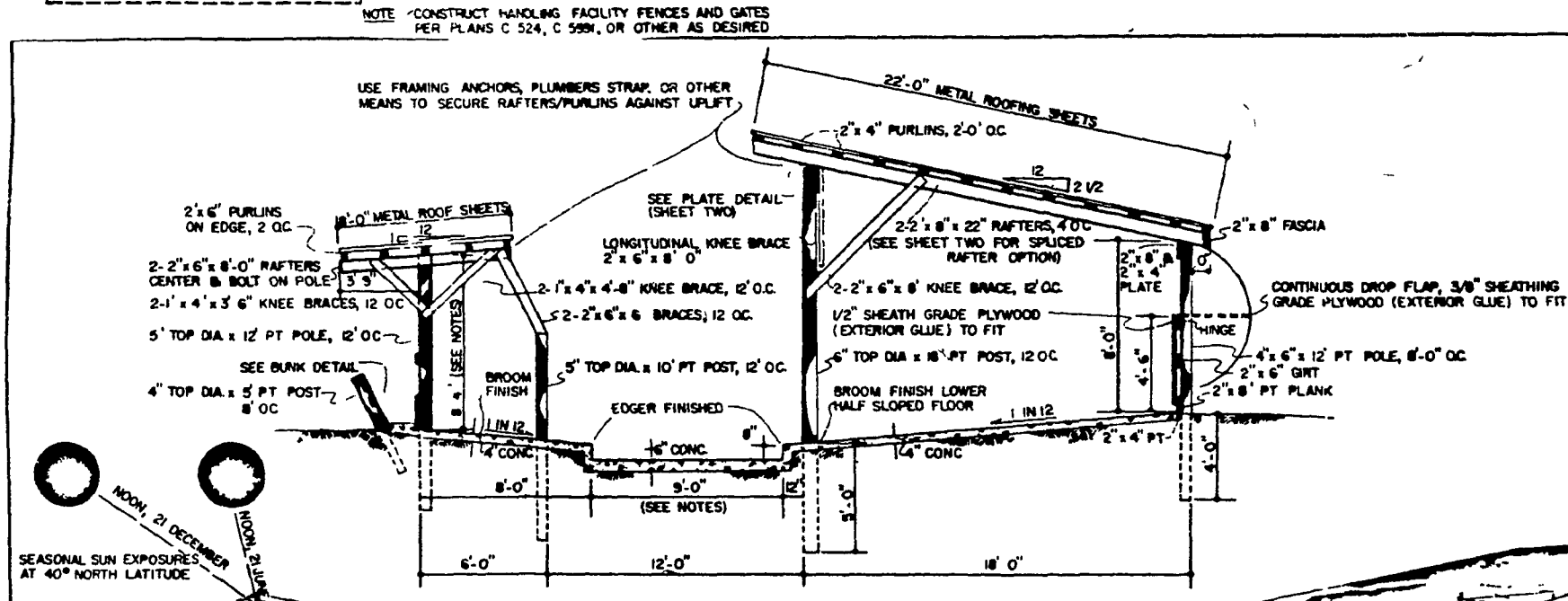

CROSS SECTION

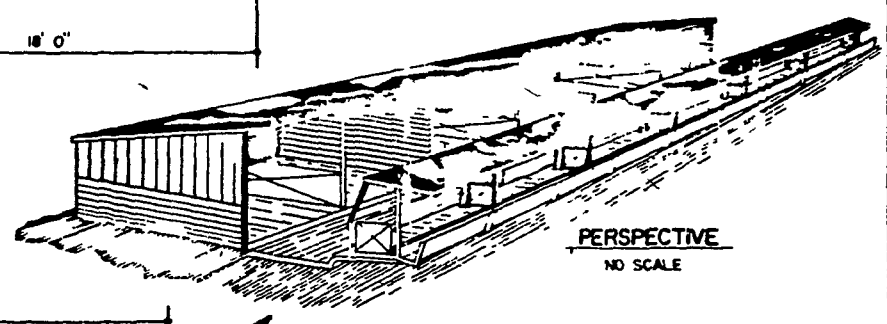

PERSPECTIVE
NO SCALE

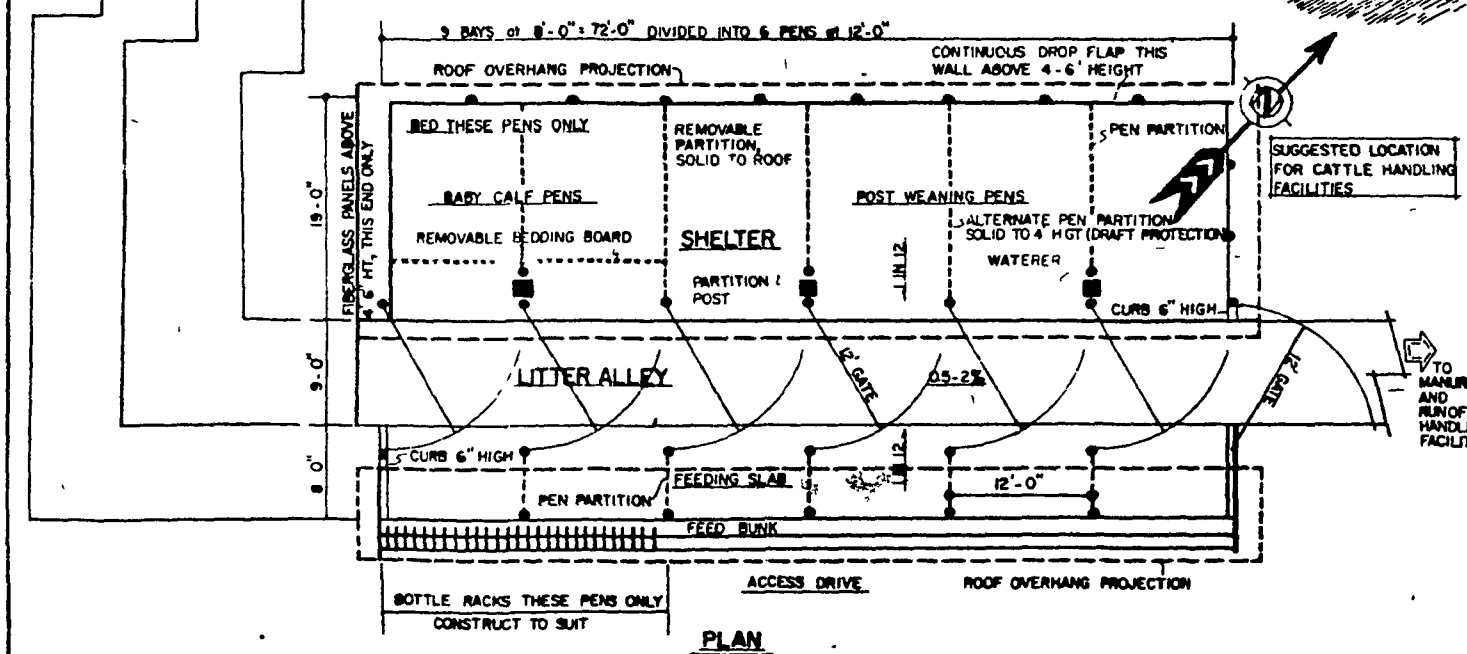

PLAN
NO SCALE

NOTES

1) SHELTER ORIENTATION IS CRITICAL. OPEN FRONT SHOULD FACE TO SOUTHEAST PREVAILING WINTER WINDS ASSUMED TO BE FROM WEST/NORTH-WEST
2) SLOPED FLOOR AREAS ARE SELF-CLEANING, NO BEDDING IS REQUIRED
3) IT MAY BE NECESSARY TO INCREASE BUNK ROOF CLEARANCE FOR FEED WAGON PASSAGE. MEASURE EQUIPMENT TO BE USED
4) LITTER ALLEY WIDTH IS VARIABLE DEPENDING ON MANURE HANDLING EQUIPMENT. SELF LOADING MANURE SPREADERS REQUIRE GREATER WIDTH WITH FLOTATION TIRES
5) ROOF DESIGN MODIFICATION - USE 40' TRUSSED ROOF. THE SECTION OVER THE SCRAPE ALLEY CAN BE COVERED WITH GREENHOUSE QUALITY FIBERGLASS. LEAVE AN 8' OPEN RIDGE. COVER EXPOSED TRUSS AT RIDGE WITH FLASHING.

PLAN No. 723-388
THE PENNSYLVANIA STATE UNIVERSITY
COOPERATIVE EXTENSION SERVICE
UNIVERSITY PARK, PENNSYLVANIA

YOUNGSTOCK HOUSING FACILITY
COUNTER-SLOPED

DEC 77 B-740 1 of 2
D3 VA. POLYTECHNIC INSTITUTE AND THE VA. STATE UNIVERSITY, BLACKSBURG
WHC JED KAB