Unique fertilizer traits explained

LANCASTER -- A chemically and physically combined fertilizer which spreads and acts uniformly in the fields is available to area farmers, according to representatives of both the manufacturer and a Lancaster County supplier.

Known as Unipel, the unique fertilizer comes in uniform granules, each of which is of identical chemical composition and weight. The material thus spreads in an even pattern in the field and provides equal plant nutrition to all areas. "You can tell how important uniformity is if you take a ping-pong ball, tennis ball, and baseball and then throw them," explained a spokesman for Chevron's Ortho Chemical Company, manufacturer of Unipel. "The balls of different size, weight, and density will not travel the same distance, that's why uniform fertilizer granules are so important for even distribution in the field," the spokesman continued. He made the remarks at a recent fertilizer meeting held on behalf of Ortho and its local distributorship, P.L. Rohrer and Co.

Unipel's physical and spreading uniformity, combined with its uniform chemical composition, provide growing plants with just the right formulation of nutrients, the Ortho spokesman continued. Each Unipel granule contains the proper amounts of nitrogen, potash, and potassium, whereas ordinary fertilizers have only one ingredient per granule. The Unipel formula is available in a variety of blends.

Another unique feature of the Unipel formula is that it offers nitrogen and phosphorus in two forms, allowing for longer availability of the nutrients to growing plants.

WHAT'S NEW

ROUND BALER

Lundell Mfg., Inc., Cherokee, Iowa announces the introduction of their 1978 round baler, the Model 760-D. This model incorporates a powdered third roller which, according to the company, will make a more dense bale if desired as well as improve the operation of the machine under most conditions. The Model 760-D is a ground driven baler entirely utilizing the forward motion of the tractor for operational power and gently rolls the hay on the window like rolling up a carpet. Leaf loss is minimized by the gentle rolling of the perfectly timed packer rollers. Tieing is effected by feeding up to five separate twines through a powered roller feed, bales may be tied as tightly as the operator may require by means of a twine tension control which may be adjusted by the operator. The Lundell Model 760-D will produce bales from 2½ ft. in diameter to six feet and in weights up to 1500 pounds depending on crop and conditions.

For Standby farm Power...use Homelite® Voltamatic® Generators.

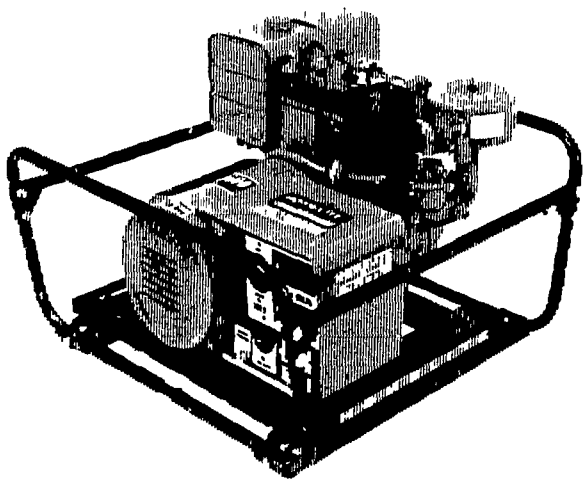

High Performance When and Where You Need It.

All models use Voltamatic® voltage control to maintain output power to within 4% from no load to full load (8% with model 170A15-1) Give extended tool life, easier motor starting, and fewer tool burnouts

- Seven models available with output capacities from 1,500 to 7,500 watts, and most have 120/240 dual voltage.
- Many equipped with Loadamatic® Idle Control which saves gas, prolongs engine life
- Control box side-mounted for easy access to receptacles.
- Choice of 2-cycle or 4-cycle engine driven models with splash lubrication system
- Units mounted on vibration isolated skids to prevent "walking"

FARMERSVILLE EQUIPMENT INC.

R.D. 4, EPHRATA, PA. 717-354-4271

New Hours: Mon., Tues., Wed. & Fri. 7:30 - 5

Thurs. - 7:30-9; Sat. 7:30-3

GOOD THRU MAY 6, 1978

TSC Stores — OUR 40th ANNIVERSARY YEAR

Come in for our Prize Drawing. No Purchase Necessary

APRIL PRESIDENT'S SALE

LOWEST PRICES IN TOWN

PRESIDENT SALE SPECIALS

master charge VISA

LAWN STAR 10 HP 32" CUT

RIDER TRACTOR

- Rear discharge
- Electric starting
- Dual head lights
- 3 Speeds forward - 1 Reverse

NOW ONLY **629.99**

Smooth, powerful and easy starting with its 32" rear discharge cutting you bring any job down to size and leave your work behind you 44 19015

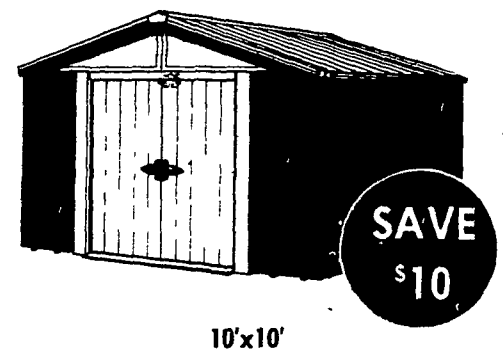

SAVE $10

10'x10'

Metal Storage Shed

139.99 Reg. $149.99

- Actual constructed size 9'6"x9'6"
- Baked-on five step rust resistant polyester finish
- Weathertight roof and wall panels
- Heavy gauge steel drive-in ramps

44 80147

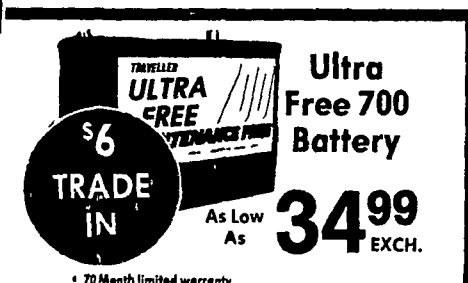

$6 TRADE IN

Ultra Free 700 Battery

As Low As **34.99** EXCH.

- 70 Month limited warranty
- Backed by 12 month free replacement
- New maintenance free battery never needs water or checking
- 69% Greater cranking power than original equipment grade
- TSC'S finest auto battery

Stock No	Size	Outright	Trade In
4 70409	22	40 99	34 99
4 70417	24	46 99	40 99
4 70452	24F	46 99	40 99
4 70441	74	48 99	42 99

TILL STAR 5 HP DELUXE

CHAIN DRIVE TILLER

259.99

- Powerful Briggs & Stratton engine
- Swinging drag stake for easy handling
- Positive chain drive
- Heavy duty slasher tines

Have your garden in perfect condition this year with this powerful tiller featuring forward & reverse power chain drive and heavy duty construction It's your finest tiller 44-80865

SPECIAL PURCHASE

ROSES

99¢

- Fast growing
- Many beautiful varieties to choose from
- Fresh and ready to plant

Make your lawn beautiful with roses from your TSC store 68-62646

SAVE 10%

CASE LOT OIL SALE

QUAKER STATE **15.36** 10W30 case

- 10W30, Reg 71¢ per quart
- 20W, Reg. 65¢ per qt. $13.92 case
- 30W, Reg. 65¢ per qt. $13.92 case
- 10W40, Reg. 73¢ per qt. $16.32 case

PENNZOIL Reg 69¢ per qt **14.88** 10W30 case

- Meets car maker requirements
- 20W, Reg. 62¢ per qt. $13.44 case
- 30W, Reg. 63¢ per qt. $13.44 case
- 10W40, Reg. 73¢ per qt. $15 84 case

SAVE $6

Wrench Set

16.99 Reg. 22.99

14 piece combination wrench set Made of forged select steel Deluxe chrome plating sizes from 3/8" through 1¼". Convenient hang up plastic pouch 39-99224

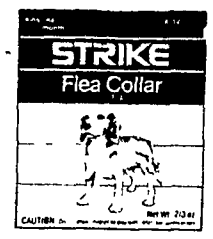

STRIKE Flea Collar

STRIKE **FLEA COLLAR**

NOW ONLY **79¢**

Kills fleas for three months Aids in control of ticks 50-50505

SAVE $30

Category II

Quick Hitch

179.99 Reg. 209.99

- Easy hook-up and disconnect
- Spring loaded locking
- Saves time and energy

Modernize your tractor with this heavy duty quick hitch No assembly needed, ready for use Just like those offered on today's newer tractors One adaptor kit included 2 67602

2-67610 Category III Quick Hitch, reg. 259.99

SAVE $40

For Package Purchase Only

Centrifugal Pump Package

- 3 HP Engine
- Reinforced PVC Hose
- Plated Steel Strainer

209.96 Reg. 249.99

Here is the deal you've been waiting for Get everything you need to handle your transfer/contractor pumping requirements at one low price This is a heavy-duty cast iron pump that can pump over 100 gallons per minute Hoses are coupled lengths

21-11695 pump with 3 hp engine 189.99
21-07939 suction hose 1½"x20" 34.99
21-07947 discharge hose 1½x25' 17.99
21-07921 steel strainer 1½" 6.99

TSC STORES

RT. 896 SOUTH OF RT 30 EAST
HARTMAN BRIDGE RD.
LANCASTER, PA 17604
717-687 7642
HOURS
Mon., Wed., Thurs. 8 to 6
Tues. & Fri. 8 to 9; Sat. 8 to 5

1818 N. CAMERON ST
HARRISBURG, PA
717-238-0436

2400 W MARKET ST
YORK, PA
717-792-0014

Prices Quoted Are Good 'Till Expiration Date At Top Of Page
We reserve the right to limit quantities, and to correct printing errors.
Prices subject to stock on hand.

119 RAILROAD AVE.
HWY. 27 E MANCHESTER RD
WESTMINSTER, MD
301-848-2060